Installer reference guide

Daikin Altherma 3 R F

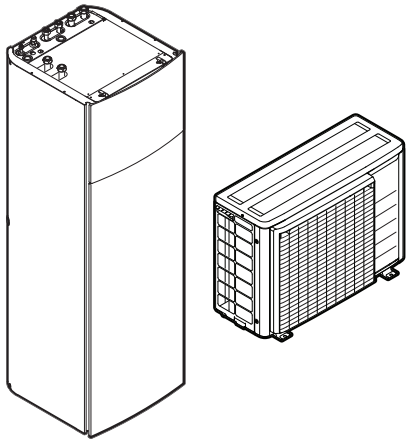

EHFZ03S18DJ3V ERLA03DAV3

Table of contents

1 General safety precautions 6
1.1 About the documentation 6
1.1.1 Meaning of warnings and symbols 6
1.2 For the installer 7
1.2.1 General 7
1.2.2 Installation site 8
1.2.3 Refrigerant 9
1.2.4 Brine 10
1.2.5 Water 11
1.2.6 Electrical 11

2 About the documentation 14
2.1 About this document 14
2.2 Installer reference guide at a glance 15

3 About the box 17
3.1 Overview: About the box 17
3.2 Outdoor unit 17
3.2.1 To unpack the outdoor unit 17
3.2.2 To handle the outdoor unit 18
3.2.3 To remove the accessories from the outdoor unit 18
3.3 Indoor unit 18
3.3.1 To unpack the indoor unit 18
3.3.2 To remove the accessories from the indoor unit 19
3.3.3 To handle the indoor unit 19

4 About the units and options 20
4.1 Overview: About the units and options 20
4.2 Identification 20
4.2.1 Identification label: Outdoor unit 20
4.2.2 Identification label: Indoor unit 21
4.3 Combining units and options 21
4.3.1 Possible combinations of indoor unit and outdoor unit 21
4.3.2 Possible options for the outdoor unit 21
4.3.3 Possible options for the indoor unit 22

5 Application guidelines 24
5.1 Overview: Application guidelines 24
5.2 Setting up the space heating system 24
5.2.1 Multiple rooms – Two LWT zones 25
5.3 Setting up the domestic hot water tank 27
5.3.1 System layout – Integrated DHW tank 27
5.3.2 Selecting the desired temperature for the DHW tank 27
5.3.3 Setup and configuration – DHW tank 28
5.3.4 DHW pump for instant hot water 29
5.3.5 DHW pump for disinfection 29
5.4 Setting up the energy metering 30
5.4.1 Produced heat 30
5.4.2 Consumed energy 30
5.4.3 Normal kWh rate power supply 31
5.4.4 Preferential kWh rate power supply 32
5.5 Setting up the power consumption control 33
5.5.1 Permanent power limitation 33
5.5.2 Power limitation activated by digital inputs 34
5.5.3 Power limitation process 35
5.6 Setting up an external temperature sensor 35

6 Unit installation 37
6.1 Preparing the installation site 37
6.1.1 Installation site requirements of the outdoor unit 38
6.1.2 Additional installation site requirements of the outdoor unit in cold climates 40
6.1.3 Installation site requirements of the indoor unit 41
6.2 Opening and closing the units 43
6.2.1 About opening the units 43
6.2.2 To open the outdoor unit 43
6.2.3 To close the outdoor unit 43

6.2.4 To open the indoor unit ... 44
6.2.5 To lower the switch box on the indoor unit ... 46
6.2.6 To close the indoor unit ... 46
6.3 Mounting the outdoor unit ... 47
6.3.1 About mounting the outdoor unit ... 47
6.3.2 Precautions when mounting the outdoor unit ... 47
6.3.3 To provide the installation structure ... 47
6.3.4 To install the outdoor unit ... 48
6.3.5 To provide drainage ... 48
6.3.6 To prevent the outdoor unit from falling over ... 49
6.4 Mounting the indoor unit ... 50
6.4.1 About mounting the indoor unit ... 50
6.4.2 Precautions when mounting the indoor unit ... 50
6.4.3 To install the indoor unit ... 50
6.4.4 To connect the drain hose to the drain ... 51
6.5 Finishing the outdoor unit installation ... 52
6.5.1 To finish the outdoor unit installation ... 52

7 Piping installation 53

7.1 Preparing refrigerant piping ... 53
7.1.1 Refrigerant piping requirements ... 53
7.1.2 Refrigerant piping insulation ... 54
7.2 Preparing water piping ... 54
7.2.1 Water circuit requirements ... 54
7.2.2 Formula to calculate the expansion vessel pre-pressure ... 57
7.2.3 To check the water volume and flow rate ... 57
7.2.4 Changing the pre-pressure of the expansion vessel ... 59
7.2.5 To check the water volume: Examples ... 60
7.3 Connecting the refrigerant piping ... 60
7.3.1 About connecting the refrigerant piping ... 60
7.3.2 Precautions when connecting the refrigerant piping ... 61
7.3.3 Guidelines when connecting the refrigerant piping ... 62
7.3.4 Pipe bending guidelines ... 62
7.3.5 To flare the pipe end ... 62
7.3.6 To braze the pipe end ... 63
7.3.7 Using the stop valve and service port ... 64
7.3.8 To connect the refrigerant piping to the outdoor unit ... 65
7.3.9 To connect the refrigerant piping to the indoor unit ... 66
7.4 Checking the refrigerant piping ... 66
7.4.1 About checking the refrigerant piping ... 66
7.4.2 Precautions when checking the refrigerant piping ... 67
7.4.3 To check for leaks ... 67
7.4.4 To perform vacuum drying ... 68
7.5 Charging refrigerant ... 69
7.5.1 About charging refrigerant ... 69
7.5.2 About the refrigerant ... 69
7.5.3 Precautions when charging refrigerant ... 70
7.5.4 To determine the complete recharge amount ... 70
7.5.5 To fix the fluorinated greenhouse gases label ... 70
7.6 Connecting water piping ... 71
7.6.1 About connecting the water piping ... 71
7.6.2 Precautions when connecting the water piping ... 71
7.6.3 To connect the water piping ... 71
7.6.4 To connect the recirculation piping ... 73
7.6.5 To fill the water circuit ... 74
7.6.6 To fill the domestic hot water tank ... 74
7.6.7 To insulate the water piping ... 74

8 Electrical installation 75

8.1 About connecting the electrical wiring ... 75
8.1.1 Precautions when connecting the electrical wiring ... 75
8.1.2 Guidelines when connecting the electrical wiring ... 76
8.1.3 Specifications of standard wiring components ... 77
8.1.4 About electrical compliance ... 78
8.1.5 About preferential kWh rate power supply ... 78
8.1.6 Overview of electrical connections except external actuators ... 79
8.2 Connections to the outdoor unit ... 79
8.2.1 To connect the electrical wiring to the outdoor unit ... 79
8.3 Connections to the indoor unit ... 80
8.3.1 To connect the main power supply ... 82

8.3.2 To connect the backup heater power supply ... 84
8.3.3 To connect the user interface ... 86
8.3.4 To connect the shut-off valve ... 87
8.3.5 To connect the electricity meters ... 88
8.3.6 To connect the domestic hot water pump ... 89
8.3.7 To connect the alarm output ... 90
8.3.8 To connect the space heating ON/OFF output ... 91
8.3.9 To connect the changeover to external heat source ... 92
8.3.10 To connect the power consumption digital inputs ... 93
8.3.11 To connect the safety thermostat (normally closed contact) ... 94
8.4 After connecting the electrical wiring to the indoor unit ... 96

9 Configuration 98
9.1 Overview: Configuration ... 98
9.1.1 To change the user permission level ... 99
9.1.2 To access the most used commands ... 99
9.1.3 To copy the system settings from the first to the second user interface ... 101
9.1.4 Quick wizard: Set the system layout after first power ON ... 102
9.2 Basic configuration ... 103
9.2.1 Quick wizard: Language / time and date ... 103
9.2.2 Quick wizard: Standard ... 103
9.2.3 Quick wizard: Options ... 106
9.2.4 Space heating/cooling control ... 110
9.2.5 Domestic hot water control ... 113
9.2.6 Contact/helpdesk number ... 113
9.3 Weather-dependent curve ... 114
9.3.1 What is a weather-dependent curve? ... 114
9.3.2 2-points curve ... 114
9.3.3 Using weather-dependent curves ... 115
9.4 Advanced configuration/optimisation ... 116
9.4.1 Space heating/cooling operation: advanced ... 116
9.4.2 Domestic hot water control: advanced ... 123
9.4.3 Heat source settings ... 128
9.4.4 System settings ... 131
9.5 Menu structure: Overview user settings ... 139
9.6 Menu structure: Overview installer settings ... 140

10 Commissioning 141
10.1 Overview: Commissioning ... 141
10.2 Precautions when commissioning ... 141
10.3 Checklist before commissioning ... 142
10.4 Checklist during commissioning ... 143
10.4.1 To check the minimum flow rate ... 143
10.4.2 Air purge function ... 144
10.4.3 To perform a test run ... 145
10.4.4 To perform an actuator test run ... 146
10.4.5 Underfloor heating screed dryout ... 146

11 Hand-over to the user 150

12 Maintenance and service 151
12.1 Overview: Maintenance and service ... 151
12.2 Maintenance safety precautions ... 151
12.3 Checklist for yearly maintenance of the outdoor unit ... 152
12.4 Checklist for yearly maintenance of the indoor unit ... 152
12.4.1 To drain the domestic hot water tank ... 155
12.5 About cleaning the water filter in case of trouble ... 156
12.5.1 To remove the water filter ... 156
12.5.2 To clean the water filter in case of trouble ... 156
12.5.3 To install the water filter ... 158

13 Troubleshooting 159
13.1 Overview: Troubleshooting ... 159
13.2 Precautions when troubleshooting ... 159
13.3 Solving problems based on symptoms ... 160
13.3.1 Symptom: The unit is NOT heating as expected ... 160
13.3.2 Symptom: The compressor does NOT start (space heating or domestic water heating) ... 161
13.3.3 Symptom: The system is making gurgling noises after commissioning ... 161
13.3.4 Symptom: The pump is blocked ... 162
13.3.5 Symptom: The pump is making noise (cavitation) ... 162
13.3.6 Symptom: The pressure relief valve opens ... 162

13.3.7 Symptom: The water pressure relief valve leaks ... 163
13.3.8 Symptom: The space is NOT sufficiently heated at low outdoor temperatures ... 164
13.3.9 Symptom: The pressure at the tapping point is temporarily unusually high ... 165
13.3.10 Symptom: Decoration panels are pushed away due to a swollen tank ... 165
13.3.11 Symptom: Tank disinfection function is NOT completed correctly (AH-error) ... 165
13.4 Solving problems based on error codes ... 165
13.4.1 Error codes: Overview ... 166

14 Disposal **173**
14.1 Overview: Disposal ... 173
14.2 To pump down ... 173

15 Technical data **175**
15.1 Piping diagram: Outdoor unit ... 175
15.2 Piping diagram: Indoor unit ... 176
15.3 Wiring diagram: Outdoor unit ... 177
15.4 Wiring diagram: Indoor unit ... 179

16 Glossary **185**

17 Field settings table **187**

1 General safety precautions

In this chapter

1.1 About the documentation 6
1.1.1 Meaning of warnings and symbols 6
1.2 For the installer 7
1.2.1 General 7
1.2.2 Installation site 8
1.2.3 Refrigerant 9
1.2.4 Brine 10
1.2.5 Water 11
1.2.6 Electrical 11

1.1 About the documentation

- The original documentation is written in English. All other languages are translations.
- The precautions described in this document cover very important topics, follow them carefully.
- The installation of the system, and all activities described in the installation manual and in the installer reference guide MUST be performed by an authorised installer.

1.1.1 Meaning of warnings and symbols

DANGER

Indicates a situation that results in death or serious injury.

DANGER: RISK OF ELECTROCUTION

Indicates a situation that could result in electrocution.

DANGER: RISK OF BURNING

Indicates a situation that could result in burning because of extreme hot or cold temperatures.

DANGER: RISK OF EXPLOSION

Indicates a situation that could result in explosion.

WARNING

Indicates a situation that could result in death or serious injury.

WARNING: FLAMMABLE MATERIAL

CAUTION

Indicates a situation that could result in minor or moderate injury.

NOTICE

Indicates a situation that could result in equipment or property damage.

INFORMATION

Indicates useful tips or additional information.

Symbols used on the unit:

Symbol	Explanation
	Before installation, read the installation and operation manual, and the wiring instruction sheet.
	Before performing maintenance and service tasks, read the service manual.
	For more information, see the installer and user reference guide.
	The unit contains rotating parts. Be careful when servicing or inspecting the unit.

Symbols used in the documentation:

Symbol	Explanation
	Indicates a figure title or a reference to it. **Example:** "1–3 Figure title" means "Figure 3 in chapter 1".
	Indicates a table title or a reference to it. **Example:** "1–3 Table title" means "Table 3 in chapter 1".

1.2 For the installer

1.2.1 General

If you are NOT sure how to install or operate the unit, contact your dealer.

DANGER: RISK OF BURNING

- Do NOT touch the refrigerant piping, water piping or internal parts during and immediately after operation. It could be too hot or too cold. Give it time to return to normal temperature. If you must touch it, wear protective gloves.
- Do NOT touch any accidental leaking refrigerant.

WARNING

Improper installation or attachment of equipment or accessories could result in electric shock, short-circuit, leaks, fire or other damage to the equipment. Only use accessories, optional equipment and spare parts made or approved by Daikin.

WARNING

Make sure installation, testing and applied materials comply with applicable legislation (on top of the instructions described in the Daikin documentation).

CAUTION

Wear adequate personal protective equipment (protective gloves, safety glasses,...) when installing, maintaining or servicing the system.

WARNING

Tear apart and throw away plastic packaging bags so that nobody, especially children, can play with them. Possible risk: suffocation.

WARNING

Provide adequate measures to prevent that the unit can be used as a shelter by small animals. Small animals that make contact with electrical parts can cause malfunctions, smoke or fire.

CAUTION

Do NOT touch the air inlet or aluminium fins of the unit.

CAUTION

- Do NOT place any objects or equipment on top of the unit.
- Do NOT sit, climb or stand on the unit.

NOTICE

Works executed on the outdoor unit are best done under dry weather conditions to avoid water ingress.

In accordance with the applicable legislation, it might be necessary to provide a logbook with the product containing at least: information on maintenance, repair work, results of tests, stand-by periods,...

Also, at least, following information MUST be provided at an accessible place at the product:

- Instructions for shutting down the system in case of an emergency
- Name and address of fire department, police and hospital
- Name, address and day and night telephone numbers for obtaining service

In Europe, EN378 provides the necessary guidance for this logbook.

1.2.2 Installation site

- Provide sufficient space around the unit for servicing and air circulation.
- Make sure the installation site withstands the weight and vibration of the unit.
- Make sure the area is well ventilated. Do NOT block any ventilation openings.
- Make sure the unit is level.

Do NOT install the unit in the following places:

- In potentially explosive atmospheres.
- In places where there is machinery that emits electromagnetic waves. Electromagnetic waves may disturb the control system, and cause malfunction of the equipment.
- In places where there is a risk of fire due to the leakage of flammable gases (example: thinner or gasoline), carbon fibre, ignitable dust.

- In places where corrosive gas (example: sulphurous acid gas) is produced. Corrosion of copper pipes or soldered parts may cause the refrigerant to leak.

1.2.3 Refrigerant

If applicable. See the installation manual or installer reference guide of your application for more information.

NOTICE

Make sure refrigerant piping installation complies with applicable legislation. In Europe, EN378 is the applicable standard.

NOTICE

Make sure the field piping and connections are NOT subjected to stress.

WARNING

During tests, NEVER pressurize the product with a pressure higher than the maximum allowable pressure (as indicated on the nameplate of the unit).

WARNING

Take sufficient precautions in case of refrigerant leakage. If refrigerant gas leaks, ventilate the area immediately. Possible risks:

- Excessive refrigerant concentrations in a closed room can lead to oxygen deficiency.
- In case of R410A or R32 refrigerant: Toxic gas might be produced if refrigerant gas comes into contact with fire.
- In case of CO_2 refrigerant: Refrigerant gas is toxic in high concentrations.

DANGER: RISK OF EXPLOSION

Pump down – Refrigerant leakage. If you want to pump down the system, and there is a leak in the refrigerant circuit:

- Do NOT use the unit's automatic pump down function, with which you can collect all refrigerant from the system into the outdoor unit. **Possible consequence:** Self-combustion and explosion of the compressor because of air going into the operating compressor.
- Use a separate recovery system so that the unit's compressor does NOT have to operate.

WARNING

ALWAYS recover the refrigerant. Do NOT release them directly into the environment. Use a vacuum pump to evacuate the installation.

NOTICE

After all the piping has been connected, make sure there is no gas leak. Use nitrogen to perform a gas leak detection.

NOTICE

- To avoid compressor breakdown, do NOT charge more than the specified amount of refrigerant.
- When the refrigerant system is to be opened, refrigerant MUST be treated according to the applicable legislation.

WARNING

Make sure there is no oxygen in the system. Refrigerant may only be charged after performing the leak test and the vacuum drying.

Possible consequence: Self-combustion and explosion of the compressor because of oxygen going into the operating compressor.

- In case recharge is required, see the nameplate of the unit. It states the type of refrigerant and necessary amount.
- The unit is factory charged with refrigerant and depending on pipe sizes and pipe lengths some systems require additional charging of refrigerant.
- Only use tools exclusively for the refrigerant type used in the system, this to ensure pressure resistance and prevent foreign materials from entering into the system.
- Charge the liquid refrigerant as follows:

If	Then
A siphon tube is present (i.e., the cylinder is marked with "Liquid filling siphon attached")	Charge with the cylinder upright.
A siphon tube is NOT present	Charge with the cylinder upside down.

- Open refrigerant cylinders slowly.
- Charge the refrigerant in liquid form. Adding it in gas form may prevent normal operation.

CAUTION

When the refrigerant charging procedure is done or when pausing, close the valve of the refrigerant tank immediately. If the valve is NOT closed immediately, remaining pressure might charge additional refrigerant. **Possible consequence:** Incorrect refrigerant amount.

1.2.4 Brine

If applicable. See the installation manual or installer reference guide of your application for more information.

WARNING

The selection of the brine MUST be in accordance with the applicable legislation.

WARNING

Take sufficient precautions in case of brine leakage. If brine leaks, ventilate the area immediately and contact your local dealer.

WARNING

The ambient temperature inside the unit can get much higher than that of the room, e.g. 70°C. In case of a brine leak, hot parts inside the unit can create a hazardous situation.

WARNING

The use and installation of the application MUST comply with the safety and environmental precautions specified in the applicable legislation.

1.2.5 Water

If applicable. See the installation manual or installer reference guide of your application for more information.

NOTICE

Make sure water quality complies with EU directive 98/83 EC.

1.2.6 Electrical

DANGER: RISK OF ELECTROCUTION

- Turn OFF all power supply before removing the switch box cover, connecting electrical wiring or touching electrical parts.
- Disconnect the power supply for more than 1 minute, and measure the voltage at the terminals of main circuit capacitors or electrical components before servicing. The voltage MUST be less than 50 V DC before you can touch electrical components. For the location of the terminals, see the wiring diagram.
- Do NOT touch electrical components with wet hands.
- Do NOT leave the unit unattended when the service cover is removed.

WARNING

If NOT factory installed, a main switch or other means for disconnection, having a contact separation in all poles providing full disconnection under overvoltage category III condition, MUST be installed in the fixed wiring.

WARNING

- ONLY use copper wires.
- Make sure the field wiring complies with the applicable legislation.
- All field wiring MUST be performed in accordance with the wiring diagram supplied with the product.
- NEVER squeeze bundled cables and make sure they do NOT come in contact with the piping and sharp edges. Make sure no external pressure is applied to the terminal connections.
- Make sure to install earth wiring. Do NOT earth the unit to a utility pipe, surge absorber, or telephone earth. Incomplete earth may cause electrical shock.
- Make sure to use a dedicated power circuit. NEVER use a power supply shared by another appliance.
- Make sure to install the required fuses or circuit breakers.
- Make sure to install an earth leakage protector. Failure to do so may cause electric shock or fire.
- When installing the earth leakage protector, make sure it is compatible with the inverter (resistant to high frequency electric noise) to avoid unnecessary opening of the earth leakage protector.

CAUTION

- When connecting the power supply: connect the earth cable first, before making the current-carrying connections.
- When disconnecting the power supply: disconnect the current-carrying cables first, before separating the earth connection.
- The length of the conductors between the power supply stress relief and the terminal block itself must be as such that the current-carrying wires are tautened before the earth wire is in case the power supply is pulled loose from the stress relief.

NOTICE

Precautions when laying power wiring:

- Do NOT connect wiring of different thicknesses to the power terminal block (slack in the power wiring may cause abnormal heat).
- When connecting wiring which is the same thickness, do as shown in the figure above.
- For wiring, use the designated power wire and connect firmly, then secure to prevent outside pressure being exerted on the terminal board.
- Use an appropriate screwdriver for tightening the terminal screws. A screwdriver with a small head will damage the head and make proper tightening impossible.
- Over-tightening the terminal screws may break them.

Install power cables at least 1 m away from televisions or radios to prevent interference. Depending on the radio waves, a distance of 1 m may not be sufficient.

WARNING

- After finishing the electrical work, confirm that each electrical component and terminal inside the electrical components box is connected securely.
- Make sure all covers are closed before starting up the unit.

NOTICE

Only applicable if the power supply is three-phase, and the compressor has an ON/OFF starting method.

If there exists the possibility of reversed phase after a momentary black out and the power goes on and off while the product is operating, attach a reversed phase protection circuit locally. Running the product in reversed phase can break the compressor and other parts.

2 About the documentation

In this chapter

2.1 About this document 14
2.2 Installer reference guide at a glance 15

2.1 About this document

Target audience

Authorised installers

Documentation set

This document is part of a documentation set. The complete set consists of:

- **General safety precautions:**
  - Safety instructions that you must read before installing
  - Format: Paper (in the box of the indoor unit)
- **Operation manual:**
  - Quick guide for basic usage
  - Format: Paper (in the box of the indoor unit)
- **User reference guide:**
  - Detailed step-by-step instructions and background information for basic and advanced usage
  - Format: Digital files on http://www.daikineurope.com/support-and-manuals/product-information/
- **Installation manual – Outdoor unit:**
  - Installation instructions
  - Format: Paper (in the box of the outdoor unit)
- **Installation manual – Indoor unit:**
  - Installation instructions
  - Format: Paper (in the box of the indoor unit)
- **Installer reference guide:**
  - Preparation of the installation, good practices, reference data, …
  - Format: Digital files on http://www.daikineurope.com/support-and-manuals/product-information/
- **Addendum book for optional equipment:**
  - Additional info about how to install optional equipment
  - Format: Paper (in the box of the indoor unit) + Digital files on http://www.daikineurope.com/support-and-manuals/product-information/

Latest revisions of the supplied documentation may be available on the regional Daikin website or via your dealer.

The original documentation is written in English. All other languages are translations.

Technical engineering data

- A **subset** of the latest technical data is available on the regional Daikin website (publicly accessible).
- The **full set** of latest technical data is available on the Daikin Business Portal (authentication required).

Online tools

In addition to the documentation set, some online tools are available for installers:

- **Heating Solutions Navigator**
  - Digital toolbox that offers a variety of tools to facilitate the installation and configuration of heating systems.
  - To access Heating Solutions Navigator, registration to the Stand By Me platform is required. For more information, see https://professional.standbyme.daikin.eu.
- **Daikin e-Care**
  - Mobile app for installers and service technicians that allows you to register, configure and troubleshoot heating systems.
  - The mobile app can be downloaded for iOS and Android devices using the QR codes below. Registration to the Stand By Me platform is required to access the app.

App Store

Google Play

2.2 Installer reference guide at a glance

Chapter	Description
General safety precautions	Safety instructions that you must read before installing
About the documentation	What documentation exists for the installer
About the box	How to unpack the units and remove their accessories
About the units and options	▪ How to identify the units ▪ Possible combinations of units and options
Application guidelines	Various installation setups of the system
Unit installation	What to do and know to install the system, including information on how to prepare for an installation
Piping installation	What to do and know to install the piping of the system, including information on how to prepare for an installation
Electrical installation	What to do and know to install the electrical components of the system, including information on how to prepare for an installation

Chapter	Description
Configuration	What to do and know to configure the system after it is installed
Commissioning	What to do and know to commission the system after it is configured
Hand-over to the user	What to give and explain to the user
Maintenance and service	How to maintain and service the units
Troubleshooting	What to do in case of problems
Disposal	How to dispose of the system
Technical data	Specifications of the system
Glossary	Definition of terms
Field settings table	Table to be filled in by the installer, and kept for future reference **Note:** There is also an installer settings table in the user reference guide. This table has to be filled in by the installer and handed over to the user.

3 About the box

In this chapter

3.1 Overview: About the box 17
3.2 Outdoor unit 17
3.2.1 To unpack the outdoor unit 17
3.2.2 To handle the outdoor unit 18
3.2.3 To remove the accessories from the outdoor unit 18
3.3 Indoor unit 18
3.3.1 To unpack the indoor unit 18
3.3.2 To remove the accessories from the indoor unit 19
3.3.3 To handle the indoor unit 19

3.1 Overview: About the box

This chapter describes what you have to do after the boxes with the outdoor and indoor unit are delivered on-site.

Keep the following in mind:

- At delivery, the unit MUST be checked for damage. Any damage MUST be reported immediately to the claims agent of the carrier.
- Bring the packed unit as close as possible to its final installation position to prevent damage during transport.
- When handling the unit, take into account the following:

  Fragile, handle the unit with care.

  Keep the unit upright in order to avoid damage.

- Prepare the path along which you want to bring the unit inside in advance.

3.2 Outdoor unit

3.2.1 To unpack the outdoor unit

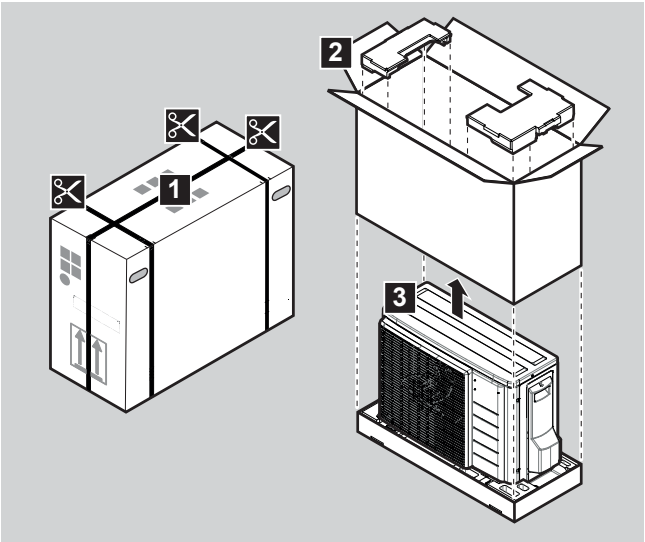

3.2.2 To handle the outdoor unit

CAUTION

To avoid injury, do NOT touch the air inlet or aluminium fins of the unit.

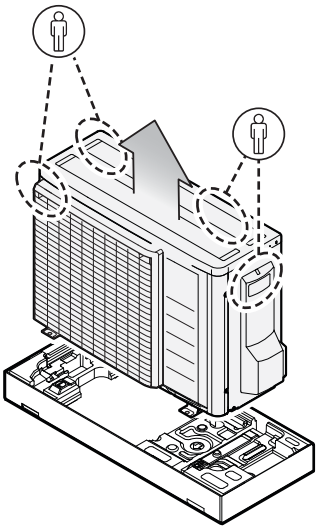

3.2.3 To remove the accessories from the outdoor unit

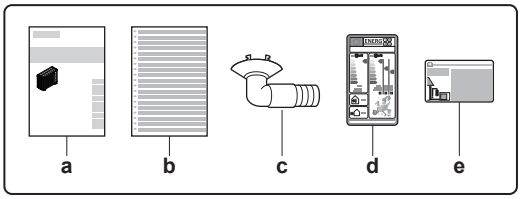

- **a** Outdoor unit installation manual
- **b** Multilingual fluorinated greenhouse gases label
- **c** Drain plug (located on the bottom of the packing case)
- **d** Energy label
- **e** Fluorinated greenhouse gases label

3.3 Indoor unit

3.3.1 To unpack the indoor unit

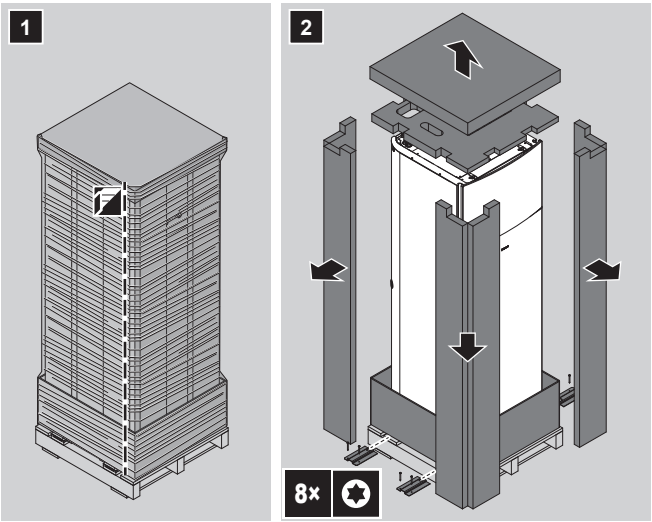

3.3.2 To remove the accessories from the indoor unit

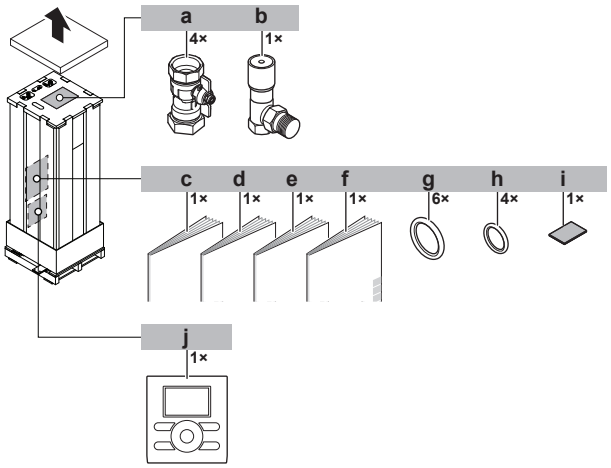

a Shut-off valves for water circuit
b Overpressure bypass valve
c General safety precautions
d Addendum book for optional equipment
e Indoor unit installation manual
f Operation manual
g Sealing rings for shut-off valves (space heating water circuit)
h Sealing rings for field-supplied shut-off valves (domestic hot water circuit)
i Sealing tape for low voltage wiring intake
j Remote user interface

3.3.3 To handle the indoor unit

Use the handles at the back and at the bottom to carry the unit.

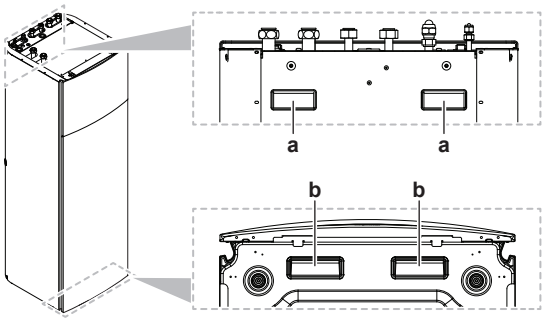

a Handles at the back of the unit
b Handles at the bottom of the unit. Carefully tilt the unit to the back so that the handles become visible.

4 About the units and options

In this chapter

4.1 Overview: About the units and options 20
4.2 Identification 20
4.2.1 Identification label: Outdoor unit 20
4.2.2 Identification label: Indoor unit 21
4.3 Combining units and options 21
4.3.1 Possible combinations of indoor unit and outdoor unit 21
4.3.2 Possible options for the outdoor unit 21
4.3.3 Possible options for the indoor unit 22

4.1 Overview: About the units and options

This chapter contains information about:

- Identifying the outdoor unit
- Identifying the indoor unit
- Combining the outdoor unit with options
- Combining the indoor unit with options

4.2 Identification

NOTICE

When installing or servicing several units at the same time, make sure NOT to switch the service panels between different models.

4.2.1 Identification label: Outdoor unit

Location

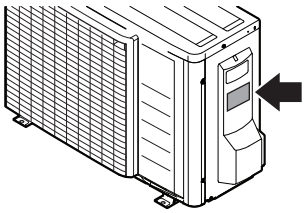

Model identification

Example: ER L A 03 DA V3

Code	Explanation
ER	European split outdoor pair heat pump
L	Low water temperature – ambient zone: −10~−20°C
A	Refrigerant R32
03	Capacity class
DA	Model series
V3	Power supply

4.2.2 Identification label: Indoor unit

Location

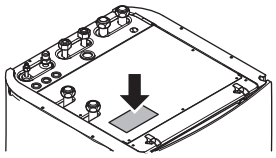

Model identification

Example: E HF Z 03 S 18 DJ 3V

Code	Description
E	European model
HF	Floor-standing indoor unit with integrated tank
Z	Dual-zone model
03	Capacity class
S	Integrated tank material: Stainless steel
18	Integrated tank volume
DJ	Model series
3V	Backup heater model

4.3 Combining units and options

INFORMATION

Certain options might not be available in your country.

4.3.1 Possible combinations of indoor unit and outdoor unit

Outdoor unit	Indoor unit
	EHFZ03S18DJ3V
ERLA03DAV3	O

4.3.2 Possible options for the outdoor unit

Bottom plate heater (EKBPHT03D)

- Prevents freeze-up of the bottom plate.
- Recommended in areas with low ambient temperature and high humidity.
- Required in areas with ambient temperatures between –7°C and –15°C when the outdoor unit is installed between 1000 m and 2000 m altitude. See "6.1.2 Additional installation site requirements of the outdoor unit in cold climates" [▸ 40] for more information.
- For installation instructions, see the installation manual of the bottom plate heater.

4.3.3 Possible options for the indoor unit

User interface used as room thermostat (BRC1HHDA)

- The user interface used as room thermostat can only be used in combination with the user interface connected to the indoor unit.
- The user interface used as room thermostat needs to be installed in the room that you want to control.

For installation instructions, see the installation and operation manual of the user interface used as room thermostat.

Room thermostat (EKRTWA, EKRTR1)

You can connect an optional room thermostat to the indoor unit. This thermostat can either be wired (EKRTWA) or wireless (EKRTR1).

For installation instructions, see the installation manual of the room thermostat and addendum book for optional equipment.

Remote sensor for wireless thermostat (EKRTETS)

You can use a wireless indoor temperature sensor (EKRTETS) only in combination with the wireless thermostat (EKRTR1).

For installation instructions, see the installation manual of the room thermostat and addendum book for optional equipment.

Digital I/O PCB (EKRP1HBAA)

The digital I/O PCB is required to provide following signals:

- Alarm output
- Space heating On/OFF output
- Changeover to external heat source

For installation instructions, see the installation manual of the digital I/O PCB and addendum book for optional equipment.

Demand PCB (EKRP1AHTA)

To enable the power saving consumption control by digital inputs you must install the demand PCB.

For installation instructions, see the installation manual of the demand PCB and addendum book for optional equipment.

Remote indoor sensor (KRCS01-1)

By default the internal user interface sensor will be used as room temperature sensor.

As an option the remote indoor sensor can be installed to measure the room temperature on another location.

For installation instructions, see the installation manual of the remote indoor sensor and addendum book for optional equipment.

INFORMATION

- The remote indoor sensor can only be used in case the user interface is configured with room thermostat functionality.
- You can only connect either the remote indoor sensor or the remote outdoor sensor.

Remote outdoor sensor (EKRSCA1)

By default the sensor inside the outdoor unit will be used to measure the outdoor temperature.

As an option the remote outdoor sensor can be installed to measure the outdoor temperature on another location (e.g. to avoid direct sunlight) to have an improved system behaviour.

For installation instructions, see the installation manual of the remote outdoor sensor and the addendum book for optional equipment.

INFORMATION

You can only connect either the remote indoor sensor or the remote outdoor sensor.

PC cable (EKPCCAB4)

The PC cable makes a connection between the switch box of the indoor unit and a PC. It gives the possibility to update the software of the indoor unit.

For installation instructions, see the installation manual of the PC cable.

Pipe bend kit (EKHVTC)

When the indoor unit is installed in a place with limited space, a pipe bend kit can be installed to facilitate the connection to the refrigerant liquid and gas connections of the indoor unit.

For installation instructions, see the instruction sheet of the pipe bend kit.

Heat pump convector (FWXV)

For installation instructions, see the installation manual of the heat pump convectors, and the addendum book for optional equipment.

LAN adapter for smartphone control + Smart Grid applications (BRP069A61)

You can install this LAN adapter to:

- Control the system via a smartphone app.
- Use the system in various Smart Grid applications.

For installation instructions, see the installation manual of the LAN adapter.

LAN adapter for smartphone control (BRP069A62)

You can install this LAN adapter to control the system via a smartphone app.

For installation instructions, see the installation manual of the LAN adapter.

5 Application guidelines

In this chapter

5.1 Overview: Application guidelines ... 24
5.2 Setting up the space heating system ... 24
5.2.1 Multiple rooms – Two LWT zones ... 25
5.3 Setting up the domestic hot water tank ... 27
5.3.1 System layout – Integrated DHW tank ... 27
5.3.2 Selecting the desired temperature for the DHW tank ... 27
5.3.3 Setup and configuration – DHW tank ... 28
5.3.4 DHW pump for instant hot water ... 29
5.3.5 DHW pump for disinfection ... 29
5.4 Setting up the energy metering ... 30
5.4.1 Produced heat ... 30
5.4.2 Consumed energy ... 30
5.4.3 Normal kWh rate power supply ... 31
5.4.4 Preferential kWh rate power supply ... 32
5.5 Setting up the power consumption control ... 33
5.5.1 Permanent power limitation ... 33
5.5.2 Power limitation activated by digital inputs ... 34
5.5.3 Power limitation process ... 35
5.6 Setting up an external temperature sensor ... 35

5.1 Overview: Application guidelines

The purpose of the application guidelines is to give a glance of the possibilities of the heat pump system.

NOTICE

- The illustrations in the application guidelines are meant for reference only, and are NOT to be used as detailed hydraulic diagrams. The detailed hydraulic dimensioning and balancing are NOT shown, and are the responsibility of the installer.
- For more information about the configuration settings to optimize heat pump operation, see "9 Configuration" [▸ 98].

This chapter contains application guidelines for:

- Setting up the space heating system
- Setting up the domestic hot water tank
- Setting up the energy metering
- Setting up the power consumption control
- Setting up an external temperature sensor

5.2 Setting up the space heating system

The heat pump system supplies leaving water to heat emitters in one or more rooms.

Because the system offers a wide flexibility to control the temperature in each room, you need to answer the following questions first:

- How many rooms are heated by the heat pump system?
- Which heat emitter types are used in each room and what is their design leaving water temperature?

Once the space heating requirements are clear, we recommend to follow the setup guidelines below.

NOTICE

If an external room thermostat is used, the external room thermostat will control the room frost protection. However, the room frost protection is only possible if the leaving water temperature control on user interface of the unit is turned ON.

INFORMATION

In case an external room thermostat is used and room frost protection needs to be guaranteed in all conditions, then you have to set auto emergency [A.6.C] to 1.

NOTICE

An overpressure bypass valve can be integrated in the system. Keep in mind that this valve might not be shown on the illustrations.

5.2.1 Multiple rooms – Two LWT zones

This unit is designed to deliver water at 2 different temperatures. A typical installation consists of underfloor heating at a lower temperature and radiators at a higher water temperature.

In this document:

- Main zone = Zone with the lowest design temperature
- Additional zone = Zone with the highest design temperature

Typical example:

Room (zone)	Heat emitters: Design temperature
Living room (main zone)	Underfloor heating: 35°C
Bed rooms (additional zone)	Heat pump convectors: 45°C

Setup

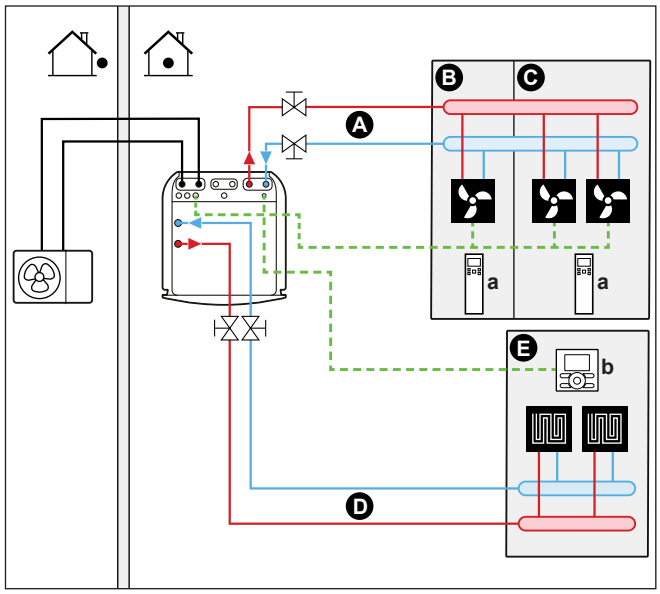

A Additional leaving water temperature zone
B Room 1
C Room 2
D Main leaving water temperature zone
E Room 3
a Remote controller of the heat pump convectors

b User interface used as room thermostat

- For the main zone: the room temperature is controlled by the user interface, which is used as room thermostat (optional equipment EKRUDAS).
- For the additional zone:
  - The external thermostat is directly connected to the indoor unit.
  - The desired room temperature is set via the external thermostat and the thermostatic valves of the radiators in each room.
  - The heating demand signal from the external thermostat is connected to the digital input on the indoor unit (X2M/35a and X2M/30). The indoor unit will only supply the desired additional leaving water temperature when there is an actual demand.
- The user interface connected to the indoor unit decides the space operation mode. Mind that the operation mode on each remote controller of the heat pump convectors must be set to match the indoor unit.

Configuration

Setting	Value
Unit temperature control: ▪ #: [A.2.1.7] ▪ Code: [C-07]	2 (`RT control`): Unit operation is decided based on the ambient temperature of the user interface. **Note:** ▪ Main room = user interface used as room thermostat functionality ▪ Other rooms = external room thermostat functionality
Number of water temperature zones: ▪ #: [A.8] ▪ Code: [7-02]	1 (`2 LWT zones`): Main + additional
In case of heat pump convectors: External room thermostat for the **additional** zone: ▪ #: [A.8] ▪ Code: [C-06]	1 (`Thermo ON/OFF`): When the used external room thermostat or heat pump convector can only send a hermos ON/OFF condition. No separation between heating or cooling demand.
Shut-off valve output	Set to follow the hermos demand of the main zone.

Benefits

- **Comfort.** The smart room thermostat functionality can decrease or increase the desired leaving water temperature based on the actual room temperature (modulation).
- **Efficiency.**
  - Depending on the demand, the indoor unit supplies different leaving water temperature matching the design temperature of the different heat emitters.
  - Underfloor heating has the best performance with the heat pump system.

5.3 Setting up the domestic hot water tank

5.3.1 System layout – Integrated DHW tank

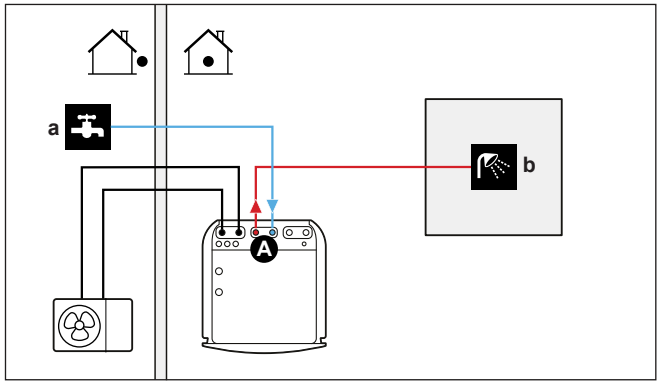

A Domestic hot water
a Cold water IN
b Hot water OUT

5.3.2 Selecting the desired temperature for the DHW tank

People experience water as hot when its temperature is 40°C. Therefore, the DHW consumption is always expressed as equivalent hot water volume at 40°C. However, you can set the DHW tank temperature at a higher temperature (example: 53°C), which is then mixed with cold water (example: 15°C).

Selecting the desired temperature for the DHW tank consists of:

1. Determining the DHW consumption (equivalent hot water volume at 40°C).
2. Determining the desired temperature for the DHW tank.

Determining the DHW consumption

Answer the following questions and calculate the DHW consumption (equivalent hot water volume at 40°C) using typical water volumes:

Question	Typical water volume
How many showers are needed per day?	1 shower = 10 min×10 l/min = 100 l
How many baths are needed per day?	1 bath = 150 l
How much water is needed at the kitchen sink per day?	1 sink = 2 min×5 l/min = 10 l
Are there any other domestic hot water needs?	—

Example: If the DHW consumption for 2 persons per day is as follows:

- 1 showers
- 1 bath
- 2 sink volumes

Then the DHW consumption = (1×100 l)+(1×150 l)+(2×10 l)=270 l

Determining the desired temperature for the DHW tank

Formula	Example
$V_1=V_2+V_2\times(T_2-40)/(40-T_1)$	If: ▪ V_2=180 l ▪ T_2=54°C ▪ T_1=15°C Then V_1=280 l

V_1 DHW consumption (equivalent hot water volume at 40°C)

V_2 Required DHW tank volume if only heated once

T_2 DHW tank temperature

T_1 Cold water temperature

DHW tank volume

Integrated DHW tank volume: 180 l (=V_2)

Energy saving tips

- If the DHW consumption differs from day to day, you can program a weekly schedule with different desired DHW tank temperatures for each day.
- The lower the desired DHW tank temperature, the more cost effective. By selecting a larger DHW tank, you can lower the desired DHW tank temperature.
- The heat pump itself can produce domestic hot water of maximum 55°C (50°C if outdoor temperature is low). The electrical resistance integrated in the heat pump can increase this temperature. However, this consumes more energy. We recommend to set the desired DHW tank temperature below 55°C to avoid using the backup heater.
- The higher the outdoor temperature, the better the performance of the heat pump.
  - If energy prices are the same during the day and the night, we recommend to heat up the DHW tank during the day.
  - If energy prices are lower during the night, we recommend to heat up the DHW tank during the night.
- When the heat pump produces domestic hot water, it cannot heat up a space. In case you need domestic hot water and space heating at the same, we recommend to produce the domestic hot water during the night when there is lower space heating demand.

5.3.3 Setup and configuration – DHW tank

- For large DHW consumptions, you can heat up the DHW tank several times during the day.
- To heat up the DHW tank to the desired DHW tank temperature, you can use the following energy sources:
  - Thermodynamic cycle of the heat pump
  - Electrical backup heater
- For more information about optimizing the energy consumption for producing domestic hot water, see "9 Configuration" [▸ 98].

5.3.4 DHW pump for instant hot water

Setup

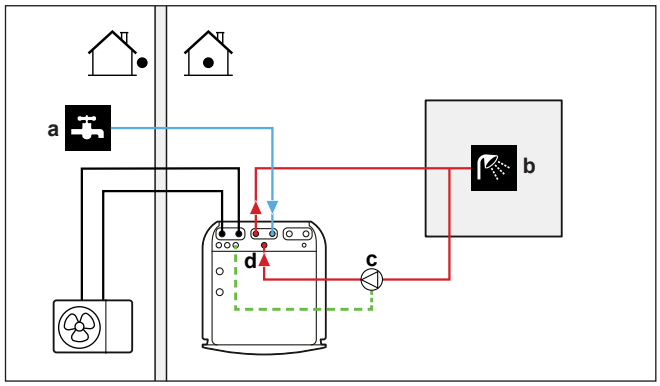

- **a** Cold water IN
- **b** Hot water OUT (shower (field supply))
- **c** DHW pump (field supply)
- **d** Recirculation connection

- By connecting a DHW pump, instant hot water can be available at the tap.
- The DHW pump and the installation are field supply and the responsibility of the installer. For the electrical wiring, see "8.3.6 To connect the domestic hot water pump" [▸ 89].

For more information about connecting the recirculation connection, see "7.6.4 To connect the recirculation piping" [▸ 73].

Configuration

- For more information, see "9 Configuration" [▸ 98].
- You can program a schedule to control the DHW pump via the user interface. For more information, see the user reference guide.

5.3.5 DHW pump for disinfection

Setup

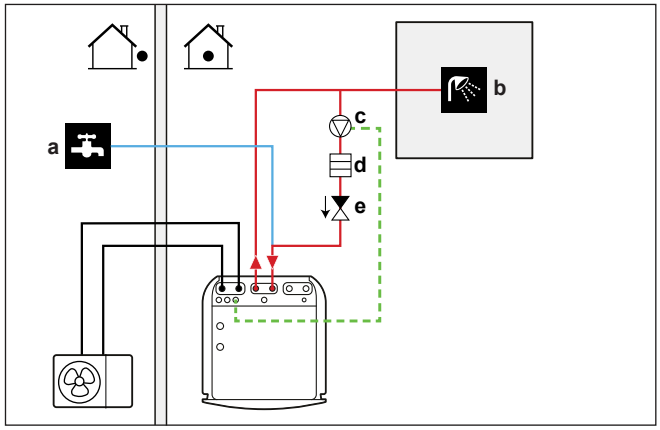

- **a** Cold water IN
- **b** Hot water OUT (shower (field supply))
- **c** DHW pump (field supply)
- **d** Heater element (field supply)
- **e** Non-return valve (field supply)

- The DHW pump is field-supplied and its installation is the responsibility of the installer. For the electrical wiring, see "8.3.6 To connect the domestic hot water pump" [▸ 89].

- If the applicable legislation requires a higher temperature than the maximum tank setpoint during disinfection (see [2-03] in the field settings table), you can connect a DHW pump and heater element as shown above.
- If applicable legislation requires disinfection of the water piping until the tapping point, you can connect a DHW pump and heater element (if needed) as shown above.
- To ensure a complete disinfection, you have to open the tapping point.

WARNING

When opening the tapping point, the water temperature can be up to 55°C.

Configuration

The indoor unit can control DHW pump operation. For more information, see "9 Configuration" [▶ 98].

5.4 Setting up the energy metering

- Via the user interface, you can read out the following energy data:
  - Produced heat
  - Consumed energy
- You can read out the energy data:
  - For space heating
  - For domestic hot water production
- You can read out the energy data:
  - Per month
  - Per year

INFORMATION

The calculated produced heat and consumed energy are an estimation, the accuracy cannot be guaranteed.

5.4.1 Produced heat

INFORMATION

The sensors used to calculate the produced heat are calibrated automatically.

- The produced heat is calculated internally based on:
  - The leaving and entering water temperature
  - The flow rate
- Setup and configuration: No additional equipment needed.

5.4.2 Consumed energy

You can use the following methods to determine the consumed energy:

- Calculating
- Measuring

INFORMATION

You cannot combine calculating the consumed energy (example: for backup heater) and measuring the consumed energy (example: for outdoor unit). If you do so, the energy data will be invalid.

Calculating the consumed energy

- The consumed energy is calculated internally based on:
  - The actual power input of the outdoor unit
  - The set capacity of the backup heater
  - The voltage
- Setup and configuration: To get accurate energy data, measure the capacity (resistance measurement) and set the capacity via the user interface for the backup heater (step 1).

Measuring the consumed energy

- Preferred method because of higher accuracy.
- Requires external power meters.
- Setup and configuration: When using electrical power meters, set the number of pulses/kWh for each power meter via the user interface.

INFORMATION

When measuring the electrical power consumption, make sure ALL power input of the system is covered by the electrical power meters.

5.4.3 Normal kWh rate power supply

General rule

One power meter that covers the entire system is sufficient.

Setup

Connect the power meter to X5M/5 and X5M/6. See "8.3.5 To connect the electricity meters" [▸ 88].

Power meter type

In case of...	Use a... power meter
▪ Single-phase outdoor unit ▪ Backup heater supplied from a single-phase grid (i.e. the backup heater model is *3V connected to a single-phase grid)	Single-phase

Example

Single-phase power meter
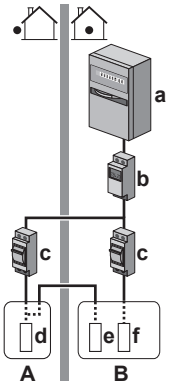
A Outdoor unit
B Indoor unit
a Electrical cabinet (L_1/N)
b Power meter (L_1/N)
c Fuse (L_1/N)
d Outdoor unit (L_1/N)
e Indoor unit (L_1/N)
f Backup heater (L_1/N)

Exception

- You can use a second power meter if:
  - The power range of one meter is insufficient.
  - The electrical meter cannot easily be installed in the electrical cabinet.
  - 230 V and 400 V three-phase grids are combined (very uncommon), because of technical limitations of power meters.
- Connection and setup:
  - Connect the second power meter to X5M/3 and X5M/4. See "8.3.5 To connect the electricity meters" [▸ 88].
  - In the software the power consumption data of both meters is added so you do NOT have to set which meter covers which power consumption. You only need to set the number of pulses of each power meter.
- See "5.4.4 Preferential kWh rate power supply" [▸ 32] for an example with two power meters.

5.4.4 Preferential kWh rate power supply

General rule

- Power meter 1: Measures the outdoor unit.
- Power meter 2: Measures the rest (i.e. indoor unit and backup heater).

Setup

- Connect power meter 1 to X5M/5 and X5M/6.
- Connect power meter 2 to X5M/3 and X5M/4.

See "8.3.5 To connect the electricity meters" [▸ 88].

Power meter types

Single-phase power meter.

5.5 Setting up the power consumption control

You can use the following power consumption controls. For more information about the corresponding settings, see "9.4 Advanced configuration/ optimisation" [▸ 116].

#	Power consumption control
1	"5.5.1 Permanent power limitation" [▸ 33] ▪ Allows you to limit the power consumption of the entire heat pump system (sum of indoor unit and backup heater) with one permanent setting. ▪ Limitation of power in kW or current in A.
2	"5.5.2 Power limitation activated by digital inputs" [▸ 34] ▪ Allows you to limit the power consumption of the entire heat pump system (sum of indoor unit and backup heater) via 4 digital inputs. ▪ Limitation of power in kW or current in A.

5.5.1 Permanent power limitation

Permanent power limitation is useful to assure a maximum power or current input of the system. In some countries, legislation limits the maximum power consumption for space heating and DHW production.

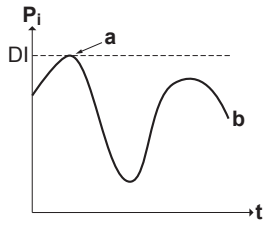

P_i	Power input
t	Time
DI	Digital input (power limitation level)
a	Power limitation active
b	Actual power input

Setup and configuration

- No additional equipment needed.
- Set the power consumption control settings in [A.6.3.1] via the user interface (for the description of all settings, see "9 Configuration" [▸ 98]):
  - Select full time limitation mode
  - Select the type of limitation (power in kW or current in A)
  - Set the desired power limitation level

NOTICE

Set a minimum power consumption of ±3.6 kW to guarantee:

- Defrost operation. Otherwise, if defrosting is interrupted several times, the heat exchanger will freeze up.
- Space heating and DHW production by allowing the backup heater step 1.

5.5.2 Power limitation activated by digital inputs

Power limitation is also useful in combination with an energy management system.

The power or current of the entire Daikin system is limited dynamically by digital inputs (maximum four steps). Each power limitation level is set via the user interface by limiting one of the following:

- Current (in A)
- Power input (in kW)

The energy management system (field supply) decides the activation of a certain power limitation level. **Example:** To limit the maximum power of the entire house (lighting, domestic appliances, space heating...).

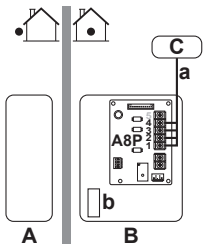

A	Outdoor unit
B	Indoor unit
C	Energy management system
a	Power limitation activation (4 digital inputs
b	Backup heater

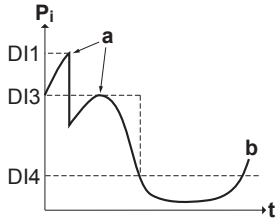

P_i	Power input
t	Time
DI	Digital inputs (power limitation levels)
a	Power limitation active
b	Actual power input

Setup

- Demand PCB (option EKRP1AHTA) needed.
- Maximum four digital inputs are used to activate the corresponding power limitation level:
  - DI1 = weakest limitation (highest energy consumption)
  - DI4 = strongest limitation (lowest energy consumption)
- For the specifications of the digital inputs, and for where to connect them, refer to the wiring diagram.

Configuration

- Set the power consumption control settings in [A.6.3.1] via the user interface (for the description of all settings, see "9 Configuration" [▸ 98]):
  - Select activation by digital inputs.
  - Select the type of limitation (power in kW or current in A).
  - Set the desired power limitation level corresponding to each digital input.

INFORMATION

In case more than 1 digital input is closed (at the same time), the digital input priority is fixed: DI4 priority>...>DI1.

5.5.3 Power limitation process

The outdoor unit has better efficiency than the electrical heater. Therefore, the electrical heater is limited and turned OFF first. The system limits power consumption in the following order:

1. Turns OFF the backup heater.
2. Limits the outdoor unit.
3. Turns OFF the outdoor unit.

Example

If the configuration is as follows: Power limitation level does NOT allow operation of backup heater (step 1).

Then power consumption is limited as follows:

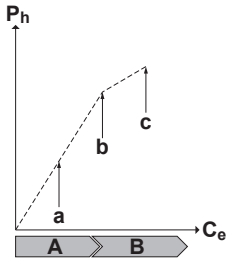

P_h	Produced heat
C_e	Consumed energy Consumed energy
A	Outdoor unit
B	Backup heater
a	Limited outdoor unit operation
b	Full outdoor unit operation
c	Backup heater step 1 turned ON

5.6 Setting up an external temperature sensor

You can connect one external temperature sensor. It measures the indoor or outdoor ambient temperature. We recommend to use an external temperature sensor in the following cases:

Indoor ambient temperature

- In room thermostat control, the user interface is used as room thermostat and it measures the indoor ambient temperature. Therefore, the user interface must be installed on a location:
  - Where the average temperature in the room can be detected
  - That is NOT exposed to direct sunlight
  - That is NOT near a heat source
  - That is NOT affected by outside air or air draught because of, for example, door opening/closing
- If this is NOT possible, we recommend to connect a remote indoor sensor (option KRCS01-1).
- Setup: For installation instructions, see the installation manual of the remote indoor sensor.

- Configuration: Select room sensor [A.2.2.B].

Outdoor ambient temperature

- In the outdoor unit, the outdoor ambient temperature is measured. Therefore, the outdoor unit must be installed on a location:
  - At the north side of the house or at the side of the house where the most heat emitters are located
  - That is NOT exposed to direct sunlight
- If this is NOT possible, we recommend to connect a remote outdoor sensor (option EKRSCA1).
- Setup: For installation instructions, see the installation manual of the remote outdoor sensor.
- Configuration: Select outdoor sensor [A.2.2.B].
- When the power saving functionality of the outdoor unit is active (see "9 Configuration" [▸ 98]), the outdoor unit is turned down to reduce standby energy losses. As a result, the outdoor ambient temperature is NOT read out.
- If the desired leaving water temperature is weather dependent, the full time outdoor temperature measurement is important. This is another reason to install the optional outdoor ambient temperature sensor.

INFORMATION

The external outdoor ambient sensor data (either averaged or instantaneous) is used in the weather-dependent control curves and in the automatic heating/cooling changeover logic. To protect the outdoor unit, the internal sensor of the outdoor unit is always used.

6 Unit installation

In this chapter

6.1 Preparing the installation site ... 37
6.1.1 Installation site requirements of the outdoor unit ... 38
6.1.2 Additional installation site requirements of the outdoor unit in cold climates ... 40
6.1.3 Installation site requirements of the indoor unit ... 41
6.2 Opening and closing the units ... 43
6.2.1 About opening the units ... 43
6.2.2 To open the outdoor unit ... 43
6.2.3 To close the outdoor unit ... 43
6.2.4 To open the indoor unit ... 44
6.2.5 To lower the switch box on the indoor unit ... 46
6.2.6 To close the indoor unit ... 46
6.3 Mounting the outdoor unit ... 47
6.3.1 About mounting the outdoor unit ... 47
6.3.2 Precautions when mounting the outdoor unit ... 47
6.3.3 To provide the installation structure ... 47
6.3.4 To install the outdoor unit ... 48
6.3.5 To provide drainage ... 48
6.3.6 To prevent the outdoor unit from falling over ... 49
6.4 Mounting the indoor unit ... 50
6.4.1 About mounting the indoor unit ... 50
6.4.2 Precautions when mounting the indoor unit ... 50
6.4.3 To install the indoor unit ... 50
6.4.4 To connect the drain hose to the drain ... 51
6.5 Finishing the outdoor unit installation ... 52
6.5.1 To finish the outdoor unit installation ... 52

6.1 Preparing the installation site

Do NOT install the unit in places often used as work place. In case of construction works (e.g. grinding works) where a lot of dust is created, the unit MUST be covered.

Choose an installation location with sufficient space for carrying the unit in and out of the site.

NOTICE

This unit is designed for operation on 2 temperature zones:

- underfloor heating in the **main zone**, this is the zone with the **lowest water temperature**,
- radiators in the **additional zone**, this is the zone with the **highest water temperature**.

WARNING

The appliance shall be stored in a room without continuously operating ignition sources (example: open flames, an operating gas appliance or an operating electric heater).

WARNING

DO NOT reuse refrigerant piping that has been used with any other refrigerant. Replace the refrigerant pipes or clean thoroughly.

6.1.1 Installation site requirements of the outdoor unit

INFORMATION

Also read the following requirements:

- General installation site requirements. See the "General safety precautions" chapter.
- Refrigerant piping requirements (length, height difference). See further in this "Unit installation" chapter.

Mind the following spacing guidelines:

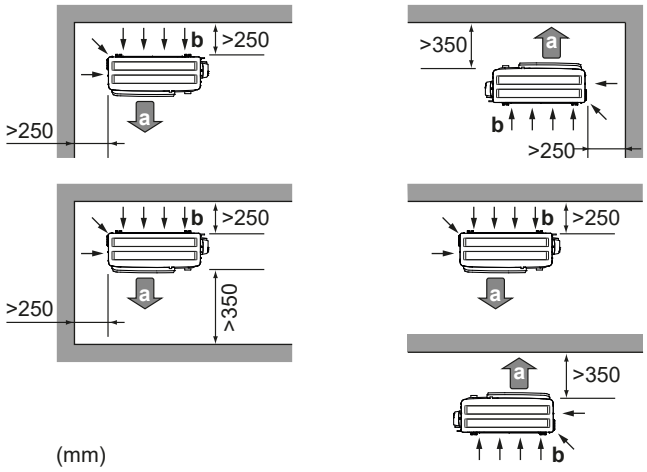

a Air outlet
b Air inlet

NOTICE

The height of the wall on the outlet side of the outdoor unit MUST be ≤1200 mm.

NOTICE

- Do NOT stack the units on each other.
- Do NOT hang the unit on a ceiling.

Strong winds (≥18 km/h) blowing against the outdoor unit's air outlet causes short circuit (suction of discharge air). This may result in:

- deterioration of the operational capacity;
- frequent frost acceleration in heating operation;
- disruption of operation due to decrease of low pressure or increase of high pressure;
- a broken fan (if a strong wind blows continuously on the fan, it may start rotating very fast, until it breaks).

It is recommended to install a baffle plate when the air outlet is exposed to wind.

It is recommended to install the outdoor unit with the air inlet facing the wall and NOT directly exposed to the wind.

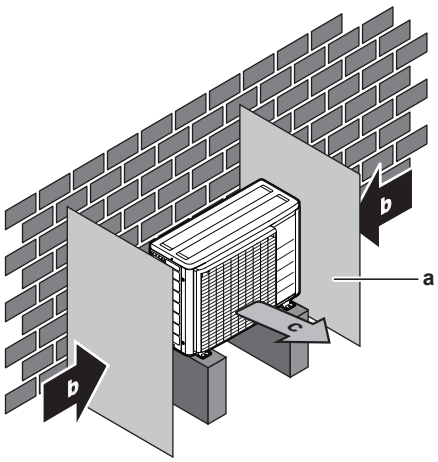

a Baffle plate
b Prevailing wind direction
c Air outlet

Do NOT install the unit in the following places:

- Sound sensitive areas (e.g. near a bedroom), so that the operation noise will cause no trouble.
  Note: If the sound is measured under actual installation conditions, the measured value might be higher than the sound pressure level mentioned in Sound spectrum in the data book due to environmental noise and sound reflections.
- In places where a mineral oil mist, spray or vapour may be present in the atmosphere. Plastic parts may deteriorate and fall off or cause water leakage.

It is NOT recommended to install the unit in the following places because it may shorten the life of the unit:

- Where the voltage fluctuates a lot
- In vehicles or vessels
- Where acidic or alkaline vapour is present

Seaside installation. Make sure the outdoor unit is NOT directly exposed to sea winds. This is to prevent corrosion caused by high levels of salt in the air, which might shorten the life of the unit.

Install the outdoor unit away from direct sea winds.

Example: Behind the building.

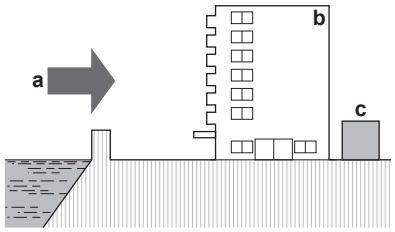

If the outdoor unit is exposed to direct sea winds, install a windbreaker.

- Height of windbreaker≥1.5×height of outdoor unit
- Mind the service space requirements when installing the windbreaker.

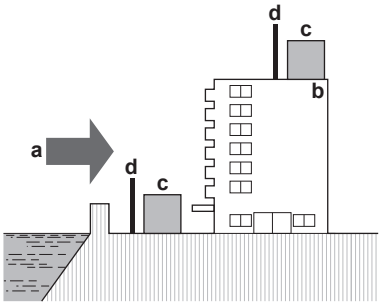

a Sea wind
b Building
c Outdoor unit
d Windbreaker

The outdoor unit is designed for outdoor installation only, and for the following ambient temperatures:

Cooling mode	10~43°C
Heating mode	–15~35°C

6.1.2 Additional installation site requirements of the outdoor unit in cold climates

Protect the outdoor unit against direct snowfall and take care that the outdoor unit is NEVER snowed up.

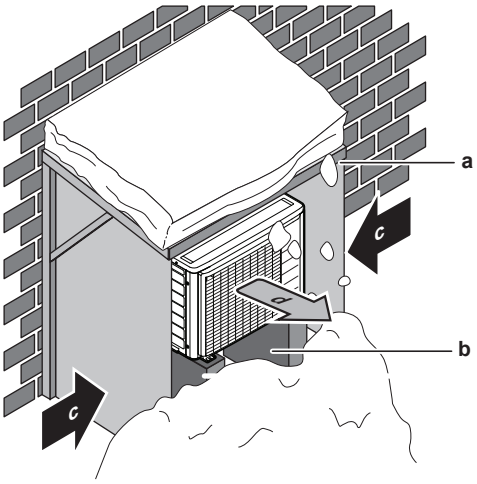

a Snow cover or shed
b Pedestal
c Prevailing wind direction
d Air outlet

It is recommended to provide at least 150 mm of free space below the unit (300 mm for heavy snowfall areas). Additionally, make sure the unit is positioned at least 100 mm above the maximum expected level of snow. If necessary, construct a pedestal. See "6.3 Mounting the outdoor unit" [▸ 47] for more details.

In heavy snowfall areas it is very important to select an installation site where the snow will NOT affect the unit. If lateral snowfall is possible, make sure that the heat exchanger coil is NOT affected by the snow. If necessary, install a snow cover or shed and a pedestal.

By default, the outdoor unit heat pump can operate until –7°C. Depending on the installation area, this can be lowered to –15°C by modifying the `BUH only ambient temp.` ([8-0E]) field setting. This setting can also be changed via the menu structure. See the installation manual of the indoor unit for how to change the setting.

Additionally, in areas with ambient temperatures between –7°C and –15°C, and depending on the altitude of the unit, the installation of a bottom plate heater (EKBPHT03D) may be required to guarantee outdoor unit operation.

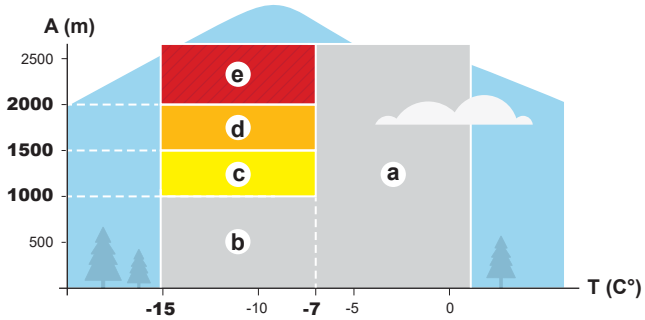

A Altitude
T Temperature
a No special installation requirements
b Below 1000 m, no bottom plate heater is installed. Set [8-0E] = –15°C.
c Unit between 1000 m and 1500 m altitude — Bottom plate heater required. Set [8-0E] = –15°C.
d Unit between 1500 m and 2000 m altitude — Bottom plate heater required and set [8-0E] = –15°C. If the unit is within 3 km of any lakes or rivers, [8-0E] = –7°C.
e Outdoor unit operation not possible below –7°C (backup heater operation only). [8-0E] = –7°C.

6.1.3 Installation site requirements of the indoor unit

> **INFORMATION**
>
> Also read the precautions and requirements in the "General safety precautions" chapter.

- The indoor unit is designed for indoor installation only and for the following ambient temperatures:
  - Space heating operation: 5~30°C
  - Domestic hot water production: 5~35°C
- Mind the following measurements guidelines:

Maximum refrigerant piping length between indoor unit and outdoor unit	20 m
Minimum refrigerant piping length between indoor unit and outdoor unit	3 m
Maximum height difference between indoor unit and outdoor unit	20 m

- Mind the following spacing installation guidelines:

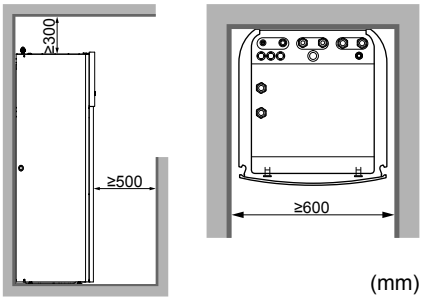

> **INFORMATION**
>
> If you have limited installation space, do the following before installing the unit in its final position: "6.4.4 To connect the drain hose to the drain" [▶ 51]. It requires to remove one or both side panels.

- The foundation must be strong enough to bear the weight of the unit. Take the weight of the unit with a domestic hot water tank full of water into account.
  Make sure, in the event of a water leak, water cannot cause any damage to the installation space and surroundings.

Do NOT install the unit in places such as:

- In places where a mineral oil mist, spray or vapour may be present in the atmosphere. Plastic parts may deteriorate and fall off or cause water leakage.
- Sound sensitive areas (e.g. near a bedroom), so that the operation noise will cause no trouble.
- In places with high humidity (max. RH=85%), for example a bathroom.
- In places where frost is possible. Ambient temperature around the indoor unit must be >5°C.

NOTICE

When the temperature in multiple rooms is controlled by 1 thermostat, do NOT place a thermostatic valve on the emitter in the room where the thermostat is installed.

Special requirements for R32

The total refrigerant charge in the system is ≤1.842 kg, so the system is NOT subjected to any requirements to the installation room. However, mind the following requirements and precautions:

WARNING

- Do NOT pierce or burn.
- Do NOT use means to accelerate the defrosting process or to clean the equipment, other than those recommended by the manufacturer.
- Be aware that R32 refrigerant does NOT contain an odour.

WARNING

The appliance shall be stored so as to prevent mechanical damage and in a well-ventilated room without continuously operating ignition sources (example: open flames, an operating gas appliance or an operating electric heater).

WARNING

Make sure installation, servicing, maintenance and repair comply with instructions from Daikin and with applicable legislation (for example national gas regulation) and are executed only by authorised persons.

NOTICE

- Pipework shall be protected from physical damage.
- Installation of pipework shall be kept to a minimum.

NOTICE

- Do NOT re-use joints which have been used already.
- Joints made in installation between parts of refrigerant system shall be accessible for maintenance purposes.

6.2 Opening and closing the units

6.2.1 About opening the units

At certain times, you have to open the unit. **Example:**

- When connecting the refrigerant piping
- When connecting the electrical wiring
- When maintaining or servicing the unit

DANGER: RISK OF ELECTROCUTION

Do NOT leave the unit unattended when the service cover is removed.

6.2.2 To open the outdoor unit

DANGER: RISK OF ELECTROCUTION

DANGER: RISK OF BURNING

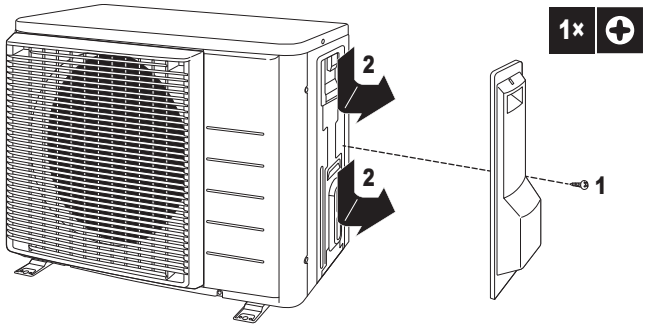

6.2.3 To close the outdoor unit

NOTICE

When closing the outdoor unit cover, make sure that the tightening torque does NOT exceed 1.3 N•m.

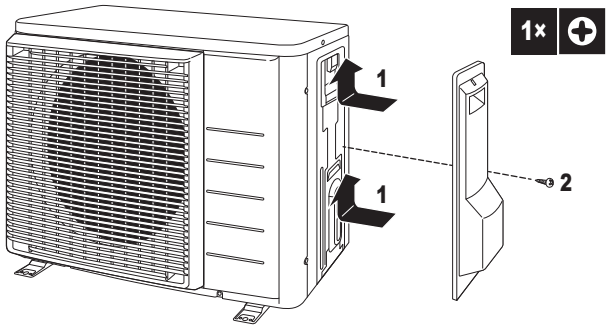

6.2.4 To open the indoor unit

Overview

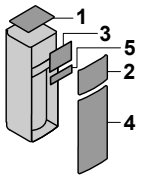

1 Top panel
2 Upper front panel
3 Switch box cover
4 Front panel
5 High voltage switch box cover

Open

1 Remove the top panel.

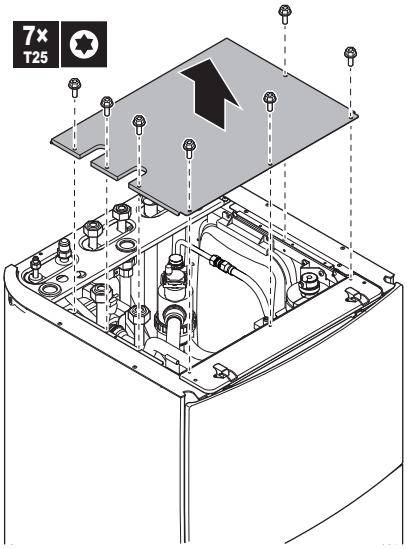

2 Remove the upper front panel. Open the hinges at the top and slide the top panel upwards.

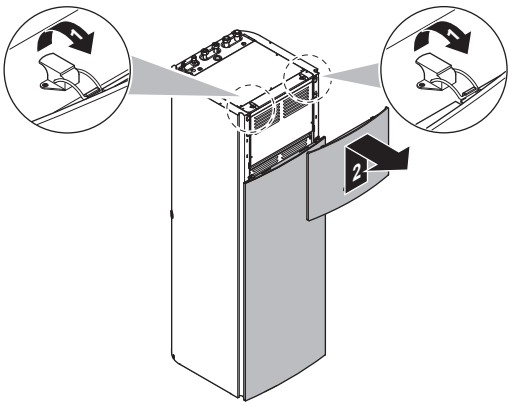

3 Remove the switch box cover.

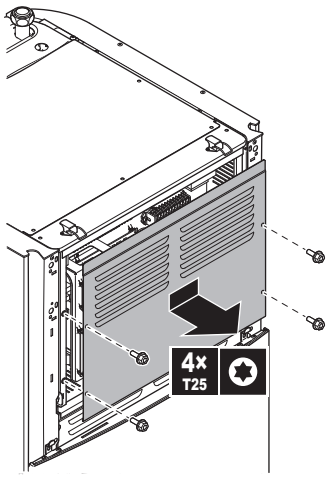

4 If necessary, remove the front plate. This is, for example, necessary in the following cases:

- "6.2.5 To lower the switch box on the indoor unit" [▸ 46]
- "6.4.4 To connect the drain hose to the drain" [▸ 51]
- When you need access to the high voltage switch box

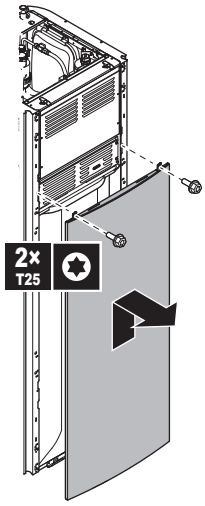

5 If you need access to the high voltage components, remove the high voltage switch box cover.

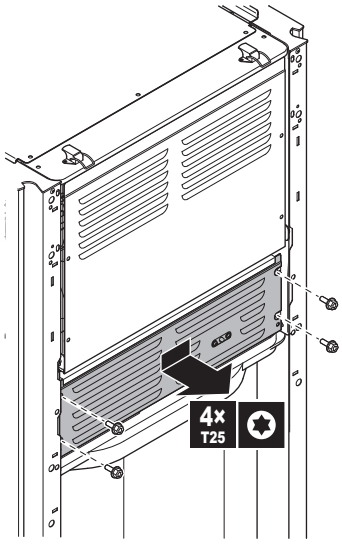

6.2.5 To lower the switch box on the indoor unit

During the installation, you will need access to the inside of the indoor unit. To have easier front access, put the switch box lower on the unit as follows:

Prerequisite: The upper front panel and front panel have been removed.

1. Remove the fixing plate at the top of the unit.
2. Tilt the switch box to the front and lift it out of its hinges.

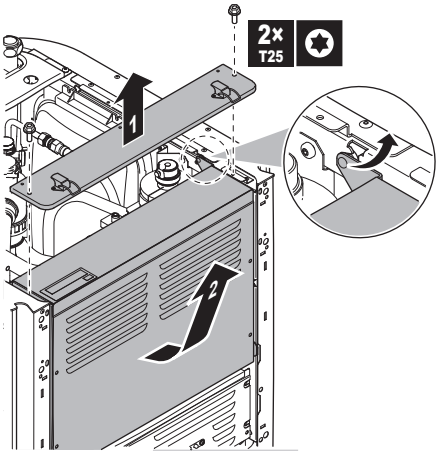

3. Place the switch box lower on the unit. Use the 2 hinges located lower on the unit.

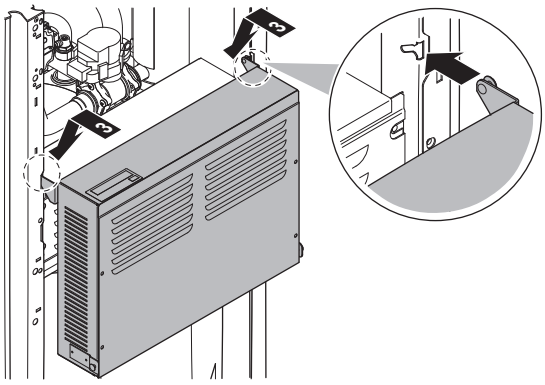

6.2.6 To close the indoor unit

1. Close the cover of the switch box.
2. Put the switch box back into place.
3. Reinstall the top panel.
4. Reinstall the side panels.
5. Reinstall the front panel.
6. Reinstall the upper front panel.

NOTICE

When closing the indoor unit cover, make sure that the tightening torque does NOT exceed 4.1 N•m.

6.3 Mounting the outdoor unit

6.3.1 About mounting the outdoor unit

When

You have to mount the outdoor and indoor unit before you can connect the refrigerant and water piping.

Typical workflow

Mounting the outdoor unit typically consists of the following stages:

1. Providing the installation structure.
2. Installing the outdoor unit.
3. Providing drainage.
4. Preventing the unit from falling over.
5. Protecting the unit against snow and wind by installing a snow cover and baffle plates. See "6.1 Preparing the installation site" [▸ 37].

6.3.2 Precautions when mounting the outdoor unit

INFORMATION

Also read the precautions and requirements in the following chapters:

- "1 General safety precautions" [▸ 6]
- "6.1 Preparing the installation site" [▸ 37]

6.3.3 To provide the installation structure

Check the strength and level of the installation ground so that the unit will not cause any operating vibration or noise.

Use a vibration-proof rubber (field supply) in cases where vibrations may be transmitted to the building.

Fix the unit securely by means of foundation bolts in accordance with the foundation drawing.

Prepare 4 sets of M8 or M10 anchor bolts, nuts and washers (field supply).

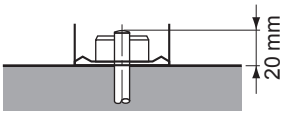

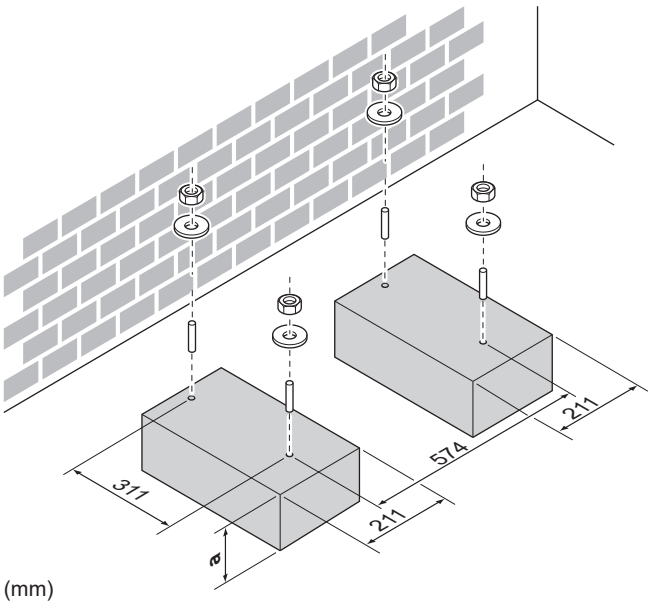

a 100 mm above expected level of snow

6.3.4 To install the outdoor unit

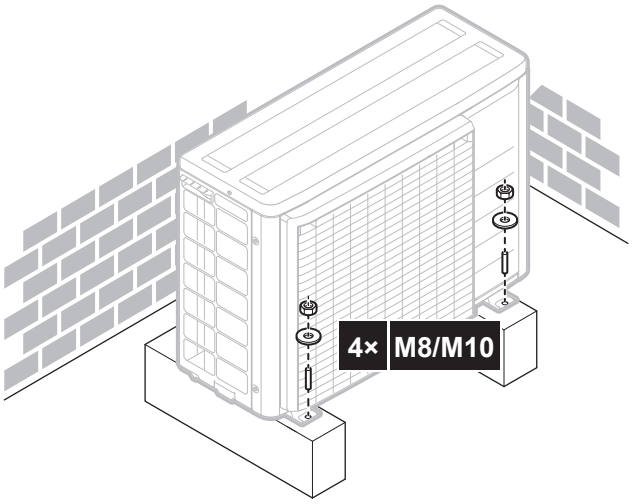

6.3.5 To provide drainage

- Make sure that condensation water can be evacuated properly.
- Install the unit on a base to make sure that there is proper drainage in order to avoid ice accumulation.
- Prepare a water drainage channel around the foundation to drain waste water away from the unit.
- Avoid drain water flowing over the footpath, so that it does NOT become slippery in case of ambient freezing temperatures.
- If you install the unit on a frame, install a waterproof plate within 150 mm of the bottom side of the unit in order to prevent water from getting into the unit and to avoid drain water dripping (see the following figure).

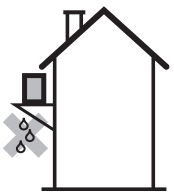

NOTICE

If the unit is installed in a cold climate, take adequate measures so that the evacuated condensate CANNOT freeze.

INFORMATION

For information on the available options, contact your dealer.

1. Use a drain plug for drainage.
2. Use a Ø16 mm hose (field supply).

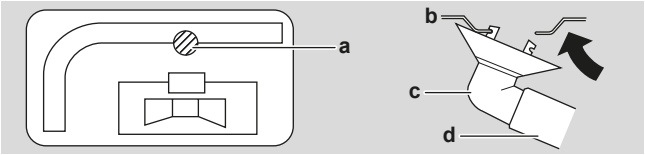

a Drain port
b Bottom frame
c Drain plug (accessory)
d Hose (field supply)

6.3.6 To prevent the outdoor unit from falling over

In case the unit is installed in places where strong wind can tilt the unit, take following measure:

1. Prepare 2 cables as indicated in the following illustration (field supply).
2. Place the 2 cables over the outdoor unit.
3. Insert a rubber sheet between the cables and the outdoor unit to prevent the cables from scratching the paint (field supply).
4. Attach the ends of the cables.
5. Tighten the cables.

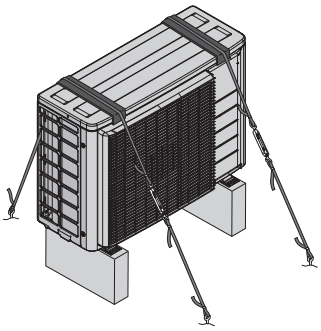

6.4 Mounting the indoor unit

6.4.1 About mounting the indoor unit

When

You have to mount the outdoor and indoor unit before you can connect the refrigerant and water piping.

Typical workflow

Mounting the indoor unit typically consists of the following stages:

1 Installing the indoor unit.

6.4.2 Precautions when mounting the indoor unit

INFORMATION

Also read the precautions and requirements in the following chapters:

- "1 General safety precautions" [▸ 6]
- "6.1 Preparing the installation site" [▸ 37]

6.4.3 To install the indoor unit

1. Lift the indoor unit from the pallet and place it on the floor. Also see "3.3.3 To handle the indoor unit" [▸ 19].
2. Connect the drain hose to the drain. See "6.4.4 To connect the drain hose to the drain" [▸ 51].
3. Slide the indoor unit into position.
4. Adjust the height of the leveling feet to compensate for floor irregularities. The maximum allowed deviation is 1°.

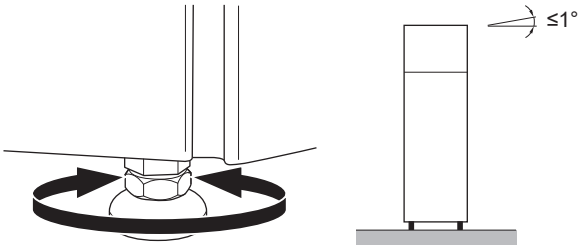

NOTICE

Do NOT tilt the unit forwards:

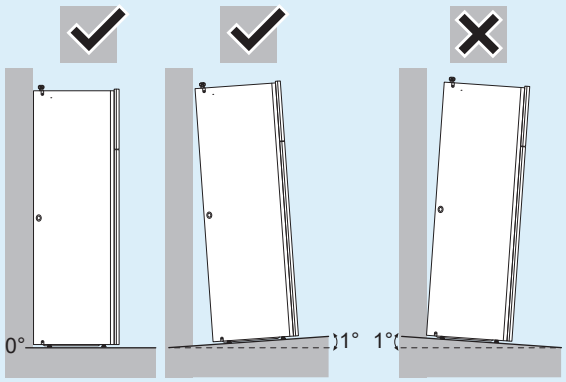

6.4.4 To connect the drain hose to the drain

Water coming from the pressure relief valve is collected in the drain pan. The drain pan is connected to a drain hose inside the unit. You must connect the drain hose to an appropriate drain according to the applicable legislation. You can route the drain hose through the left or right side panel.

1. Remove one of the side panels.
2. Cut out the rubber grommet.
3. Pull the drain hose through the hole.
4. Reattach the side panel. Ensure the water can flow through the drain tube.

It is recommended to use a tundish to collect the water.

Option 1: Through the left side panel

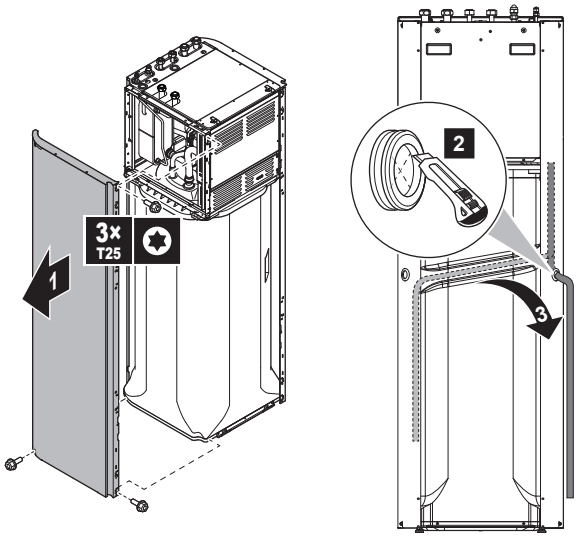

Option 2: Through the right side panel

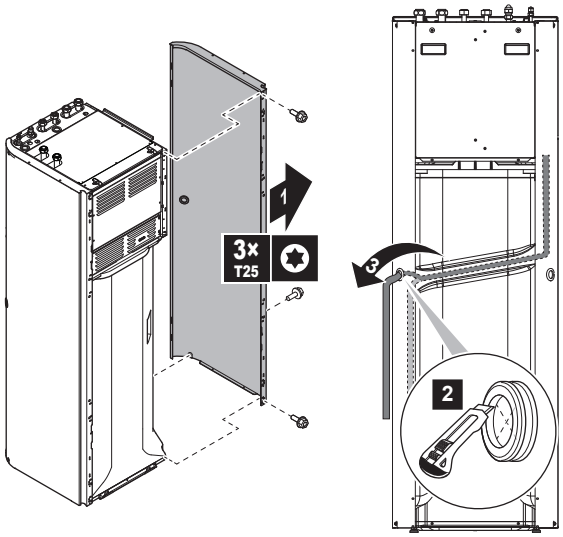

6.5 Finishing the outdoor unit installation

6.5.1 To finish the outdoor unit installation

DANGER: RISK OF ELECTROCUTION

- Make sure that the system is earthed properly.
- Turn off the power supply before servicing.
- Install the service cover before turning on the power supply.

NOTICE

It is recommended that the refrigerant piping between indoor and outdoor unit is installed in a ducting or the refrigerant piping is wrapped with finishing tape.

1 Insulate and fix the refrigerant piping and cables as follows:

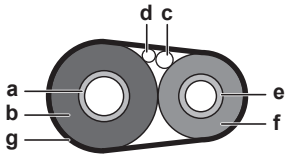

a	Gas pipe
b	Gas pipe insulation
c	Interconnection cable
d	Field wiring (if applicable)
e	Liquid pipe
f	Liquid pipe insulation
g	Finishing tape

2 Install the service cover.

7 Piping installation

In this chapter

7.1 Preparing refrigerant piping ... 53
7.1.1 Refrigerant piping requirements ... 53
7.1.2 Refrigerant piping insulation ... 54
7.2 Preparing water piping ... 54
7.2.1 Water circuit requirements ... 54
7.2.2 Formula to calculate the expansion vessel pre-pressure ... 57
7.2.3 To check the water volume and flow rate ... 57
7.2.4 Changing the pre-pressure of the expansion vessel ... 59
7.2.5 To check the water volume: Examples ... 60
7.3 Connecting the refrigerant piping ... 60
7.3.1 About connecting the refrigerant piping ... 60
7.3.2 Precautions when connecting the refrigerant piping ... 61
7.3.3 Guidelines when connecting the refrigerant piping ... 62
7.3.4 Pipe bending guidelines ... 62
7.3.5 To flare the pipe end ... 62
7.3.6 To braze the pipe end ... 63
7.3.7 Using the stop valve and service port ... 64
7.3.8 To connect the refrigerant piping to the outdoor unit ... 65
7.3.9 To connect the refrigerant piping to the indoor unit ... 66
7.4 Checking the refrigerant piping ... 66
7.4.1 About checking the refrigerant piping ... 66
7.4.2 Precautions when checking the refrigerant piping ... 67
7.4.3 To check for leaks ... 67
7.4.4 To perform vacuum drying ... 68
7.5 Charging refrigerant ... 69
7.5.1 About charging refrigerant ... 69
7.5.2 About the refrigerant ... 69
7.5.3 Precautions when charging refrigerant ... 70
7.5.4 To determine the complete recharge amount ... 70
7.5.5 To fix the fluorinated greenhouse gases label ... 70
7.6 Connecting water piping ... 71
7.6.1 About connecting the water piping ... 71
7.6.2 Precautions when connecting the water piping ... 71
7.6.3 To connect the water piping ... 71
7.6.4 To connect the recirculation piping ... 73
7.6.5 To fill the water circuit ... 74
7.6.6 To fill the domestic hot water tank ... 74
7.6.7 To insulate the water piping ... 74

7.1 Preparing refrigerant piping

7.1.1 Refrigerant piping requirements

INFORMATION

Also read the precautions and requirements in the "General safety precautions" chapter.

- **Piping material:** Phosphoric acid deoxidised seamless copper.
- **Piping diameter:**

Liquid piping	Ø6.4 mm (1/4")
Gas piping	Ø9.5 mm (3/8")

- **Piping temper grade and thickness:**

Outer diameter (Ø)	Temper grade	Thickness (t)[a]	
6.4 mm (1/4")	Annealed (O)	≥0.8 mm	
9.5 mm (3/8")	Annealed (O)	≥1.0 mm	

[a] Depending on the applicable legislation and the maximum working pressure of the unit (see "PS High" on the unit name plate), larger piping thickness might be required.

7.1.2 Refrigerant piping insulation

- Use polyethylene foam as insulation material:
  - with a heat transfer rate between 0.041 and 0.052 W/mK (0.035 and 0.045 kcal/mh°C)
  - with a heat resistance of at least 120°C
- Insulation thickness

Pipe outer diameter ($Ø_p$)	Insulation inner diameter ($Ø_i$)	Insulation thickness (t)
6.4 mm (1/4")	8~10 mm	≥10 mm
9.5 mm (3/8")	10~14 mm	≥13 mm

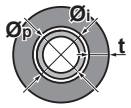

If the temperature is higher than 30°C and the humidity is higher than RH 80%, the thickness of the insulation materials should be at least 20 mm to prevent condensation on the surface of the insulation.

7.2 Preparing water piping

7.2.1 Water circuit requirements

INFORMATION

Also read the precautions and requirements in the "General safety precautions" chapter.

NOTICE

In case of plastic pipes, make sure they are fully oxygen diffusion tight according to DIN 4726. The diffusion of oxygen into the piping can lead to excessive corrosion.

- **Connecting piping – Legislation.** Make all piping connections in accordance with the applicable legislation and the instructions in the "Installation" chapter, respecting the water inlet and outlet.
- **Connecting piping – Force.** Do NOT use excessive force when connecting the piping. Deformation of the piping can cause malfunctioning of the unit.
- **Connecting piping – Tools.** Only use appropriate tooling to handle brass, which is a soft material. If NOT, pipes will get damaged.

- **Connecting piping – Air, moisture, dust.** If air, moisture or dust gets into the circuit, problems may occur. To prevent this:
  - Only use clean pipes
  - Hold the pipe end downwards when removing burrs.
  - Cover the pipe end when inserting it through a wall, to prevent dust and/or particles from entering the pipe.
  - Use a decent thread sealant to seal connections.
- **Closed circuit.** Use the indoor unit ONLY in a closed water system. Using the system in an open water system will lead to excessive corrosion.
- **Glycol.** For safety reasons, it is NOT allowed to add any kind of glycol to the water circuit.
- **Piping length.** It is recommended to avoid long runs of piping between the domestic hot water tank and the hot water end point (shower, bath,...) and to avoid dead ends.
- **Piping diameter.** Select the water piping diameter in relation to the required water flow and the available external static pressure of the pump. See "15 Technical data" [▶ 175] for the external static pressure curves of the indoor unit.
- **Water flow.** You can find the minimum required water flow for indoor unit operation in the following table. In all cases, this flow needs to be guaranteed. When the flow is lower, the indoor unit will stop operation and display error 7H.

Minimum required flow rate
12 l/min

- **Field supply components – Water.** Only use materials that are compatible with water used in the system and with the materials used in the indoor unit.
- **Field supply components – Water pressure and temperature.** Check that all components in the field piping can withstand the water pressure and water temperature.
- **Water pressure.** The maximum water pressure is 4 bar. Provide adequate safeguards in the water circuit to ensure that the maximum pressure is NOT exceeded.
- **Water temperature.** All installed piping and piping accessories (valve, connections,...) MUST withstand the following temperatures:

> **INFORMATION**
> The following illustration is an example and might NOT match your system layout.

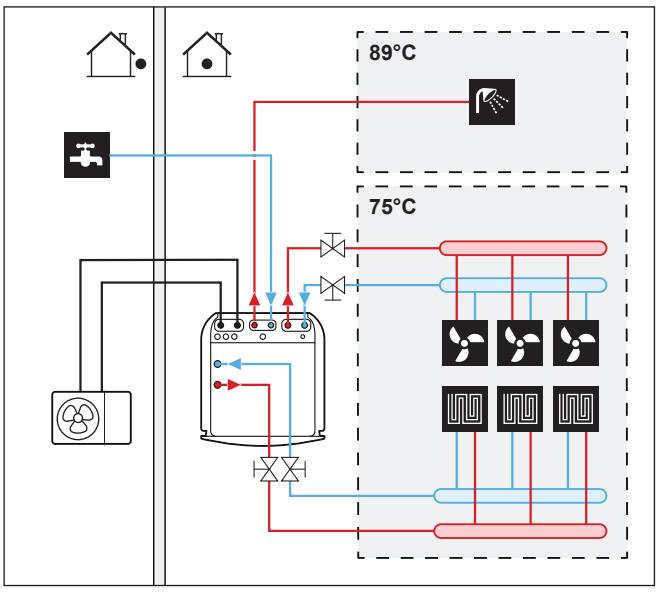

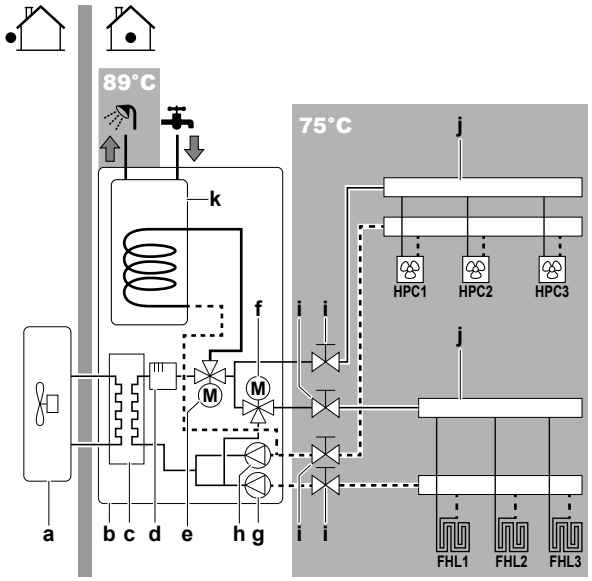

a	Outdoor unit
b	Indoor unit
c	Heat exchanger
d	Backup heater
e	Motorised 3-way valve (switch between space heating and domestic hot water)
f	Motorised 3-way valve (mixing the main zone)
g	Main pump
h	Additional pump
i	Shut-off valve
j	Collector (field supply)
k	Domestic hot water tank
HPC1...3	Heat pump convector (field supply)
FHL1...3	Floor heating loop (field supply)

- **Drainage – Low points.** Provide drain taps at all low points of the system in order to allow complete drainage of the water circuit.
- **Drainage – Pressure relief valve.** Connect the drain hose properly to the drain to avoid water dripping out of the unit. See "6.4.4 To connect the drain hose to the drain" [▶ 51].
- **Air vents.** Provide air vents at all high points of the system, which must also be easily accessible for servicing. Two automatic air purges are provided in the indoor unit. Check that the air purges are NOT tightened too much, so that automatic release of air in the water circuit is possible.

- **Zn-coated parts.** Never use zinc coated parts in the water circuit. Because the internal water circuit of the unit uses copper piping, excessive corrosion may occur.
- **Non-brass metallic piping.** When using non-brass metallic piping, insulate the brass and non-brass properly so that they do NOT make contact with each other. This to prevent galvanic corrosion.
- **Valve – Change-over time.** When using a 2-way valve or a 3-way valve in the water circuit, the maximum change-over time of the valve must be 60 seconds.
- **Domestic hot water tank – Capacity.** To avoid stagnation of water, it is important that the storage capacity of the domestic hot water tank meets the daily consumption of domestic hot water.
- **Domestic hot water tank – After installation.** Immediately after installation, the domestic hot water tank must be flushed with fresh water. This procedure must be repeated at least once a day the first 5 consecutive days after installation.
- **Domestic hot water tank – Standstills.** In cases where during longer periods of time there is no consumption of hot water, the equipment MUST be flushed with fresh water before usage.
- **Domestic hot water tank – Disinfection.** For the disinfection function of the domestic hot water tank, see "9.4.2 Domestic hot water control: advanced" [▶ 123].
- **Thermostatic mixing valves.** In accordance with the applicable legislation, it may be necessary to install thermostatic mixing valves.
- **Hygienic measures.** The installation must be in compliance with the applicable legislation and may require additional hygienic installation measures.
- **Recirculation pump.** In accordance with the applicable legislation, it may be required to connect a recirculation pump in between the hot water end point and the recirculation connection of the domestic hot water tank.

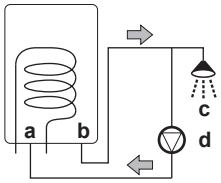

a Recirculation connection
b Hot water connection
c Shower
d Recirculation pump

7.2.2 Formula to calculate the expansion vessel pre-pressure

The pre-pressure (Pg) of the vessel depends on the installation height difference (H):

Pg=0.3+(H/10) (bar)

7.2.3 To check the water volume and flow rate

The indoor unit has an expansion vessel of 10 litre with a factory-set pre-pressure of 1 bar.

To make sure that the unit operates properly:

- You must check the minimum and maximum water volume.
- You might need to adjust the pre-pressure of the expansion vessel.

Minimum water volume

There are no requirements for the minimum water volume.

> **INFORMATION**
>
> In critical processes, or in rooms with a high heat load, extra water might be required.

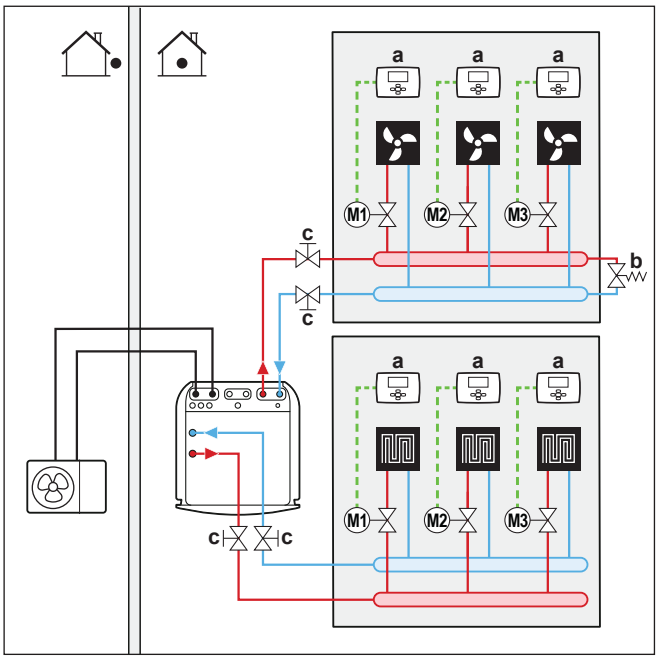

a Individual room thermostat (optional)
b Overpressure bypass valve (delivered as accessory)
c Shut-off valve

Maximum water volume

Use the following graph to determine the maximum water volume for the calculated pre-pressure.

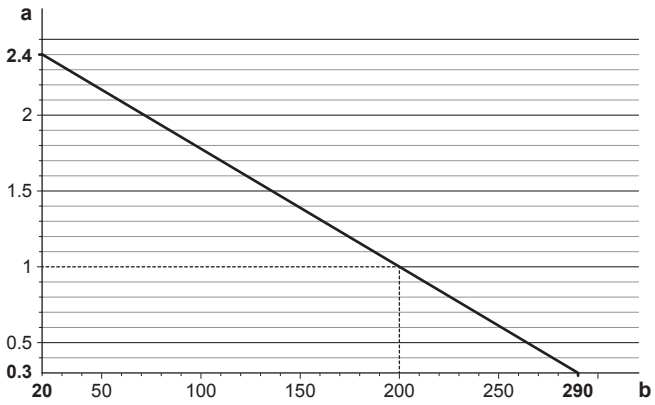

a Pre-pressure (bar)
b Maximum water volume (l)

Example: Maximum water volume and expansion vessel pre-pressure

Installation height difference[a]	Water volume	
	≤200 l	>200 l
≤7 m	No pre-pressure adjustment is required.	Do the following: ▪ Decrease the pre-pressure according to the required installation height difference. The pre-pressure should decrease by 0.1 bar for each metre below 7 m. ▪ Check if the water volume does NOT exceed the maximum allowed water volume.
>7 m	Do the following: ▪ Increase the pre-pressure according to the required installation height difference. The pre-pressure should increase by 0.1 bar for each metre above 7 m. ▪ Check if the water volume does NOT exceed the maximum allowed water volume.	The expansion vessel of the indoor unit is too small for the installation. In this case, it is recommended to install an extra vessel outside the unit.

[a] This is the height difference (m) between the highest point of the water circuit and the indoor unit. If the indoor unit is at the highest point of the installation, the installation height is 0 m.

Minimum flow rate

Check that the minimum flow rate in the installation is guaranteed in all conditions on each zone separately. This minimum flow rate is required during defrost/backup heater operation. For this purpose, use the overpressure bypass valve delivered with the unit.

NOTICE

When circulation in each or certain space heating loops is controlled by remotely controlled valves, it is important that the minimum flow rate is guaranteed, even if all valves are closed. In case the minimum flow rate cannot be reached, a flow error 7H will be generated (no heating or operation).

Minimum required flow rate
12 l/min

See the recommended procedure as described in "10.4 Checklist during commissioning" [▶ 143].

7.2.4 Changing the pre-pressure of the expansion vessel

NOTICE

Only a licensed installer may adjust the pre-pressure of the expansion vessel.

The default pre-pressure of the expansion vessel is 1 bar. When it is required to change the pre-pressure, take following guidelines into account:

- Only use dry nitrogen to set the expansion vessel pre-pressure.
- Inappropriate setting of the expansion vessel pre-pressure will lead to malfunction of the system.

Changing the pre-pressure of the expansion vessel should be done by releasing or increasing nitrogen pressure through the Schrader valve of the expansion vessel.

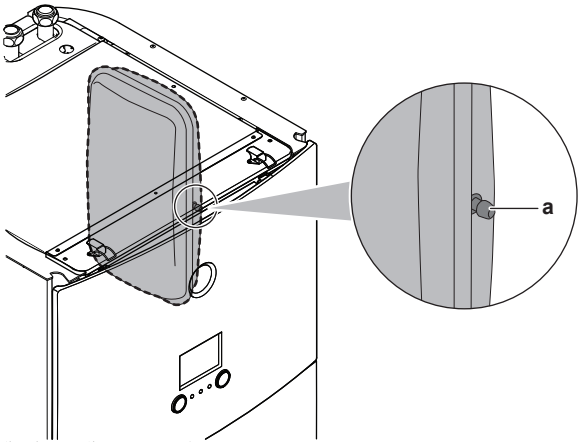

a Schrader valve

7.2.5 To check the water volume: Examples

Example 1

The indoor unit is installed 5 m below the highest point in the water circuit. The total water volume in the water circuit is 100 l.

No actions or adjustments are required.

Example 2

The indoor unit is installed at the highest point in the water circuit. The total water volume in the water circuit is 250 l.

Actions:

- Because the total water volume (250 l) is more than the default water volume (200 l), the pre-pressure must be decreased.
- The required pre-pressure is:
  Pg = (0.3+(H/10)) bar = (0.3+(0/10)) bar = 0.3 bar
- The corresponding maximum water volume at 0.3 bar is 290 l. (See the graph in "Maximum water volume" [▸ 58]).
- Because 250 l is lower than 290 l, the expansion vessel is appropriate for the installation.

7.3 Connecting the refrigerant piping

7.3.1 About connecting the refrigerant piping

Before connecting the refrigerant piping

Make sure the outdoor and indoor unit are mounted.

Typical workflow

Connecting the refrigerant piping involves:

- Connecting the refrigerant piping to the outdoor unit
- Connecting the refrigerant piping to the indoor unit
- Insulating the refrigerant piping
- Keeping in mind the guidelines for:
  - Pipe bending
  - Flaring pipe ends
  - Brazing
  - Using the stop valves

7.3.2 Precautions when connecting the refrigerant piping

INFORMATION

Also read the precautions and requirements in the following chapters:

- "1 General safety precautions" [▸ 6]
- "7.1 Preparing refrigerant piping" [▸ 53]

DANGER: RISK OF BURNING

CAUTION

- Do NOT use mineral oil on flared part.
- Do NOT reuse piping from previous installations.
- NEVER install a drier to this R32 unit to guarantee its lifetime. The drying material may dissolve and damage the system.

NOTICE

Take the following precautions on refrigerant piping into account:

- Avoid anything but the designated refrigerant to get mixed into the refrigerant cycle (e.g. air).
- Only use R32 when adding refrigerant.
- Only use installation tools (e.g. manifold gauge set) that are exclusively used for R32 installations to withstand the pressure and to prevent foreign materials (e.g. mineral oils and moisture) from mixing into the system.
- Install the piping so that the flare is NOT subjected to mechanical stress.
- Protect the piping as described in the following table to prevent dirt, liquid or dust from entering the piping.
- Use caution when passing copper tubes through walls (see figure below).

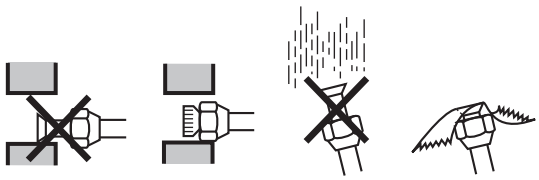

Unit	Installation period	Protection method
Outdoor unit	>1 month	Pinch the pipe
	<1 month	Pinch or tape the pipe
Indoor unit	Regardless of the period	

INFORMATION

Do NOT open the refrigerant stop valve before checking the refrigerant piping. When you need to charge additional refrigerant it is recommended to open the refrigerant stop valve after charging.

7.3.3 Guidelines when connecting the refrigerant piping

Take the following guidelines into account when connecting pipes:

- Coat the flare inner surface with ether oil or ester oil when connecting a flare nut. Tighten 3 or 4 turns by hand, before tightening firmly.

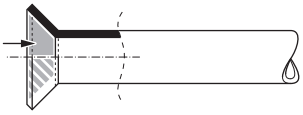

- ALWAYS use 2 wrenches together when loosening a flare nut.
- ALWAYS use a spanner and torque wrench together to tighten the flare nut when connecting the piping. This to prevent nut cracking and leaks.

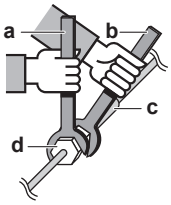

a Torque wrench
b Spanner
c Piping union
d Flare nut

Piping size (mm)	Tightening torque (N•m)	Flare dimensions (A) (mm)	Flare shape (mm)
Ø6.4	15~17	8.7~9.1	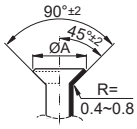
Ø9.5	33~39	12.8~13.2	

7.3.4 Pipe bending guidelines

Use a pipe bender for bending. All pipe bends should be as gentle as possible (bending radius should be 30~40 mm or larger).

7.3.5 To flare the pipe end

CAUTION

- Incomplete flaring may cause refrigerant gas leakage.
- Do NOT re-use flares. Use new flares to prevent refrigerant gas leakage.
- Use flare nuts that are included with the unit. Using different flare nuts may cause refrigerant gas leakage.

1 Cut the pipe end with a pipe cutter.

2 Remove burrs with the cut surface facing down so that the chips do NOT enter the pipe.

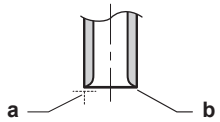

a Cut exactly at right angles.
b Remove burrs.

3 Remove the flare nut from the stop valve and put the flare nut on the pipe.

4 Flare the pipe. Set exactly at the position as shown in the following figure.

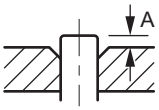

	Flare tool for R32 (clutch type)	Conventional flare tool	
		Clutch type (Ridgid-type)	Wing nut type (Imperial-type)
A	0~0.5 mm	1.0~1.5 mm	1.5~2.0 mm

5 Check that the flaring is properly made.

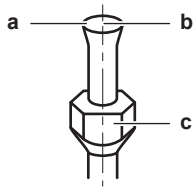

a Flare's inner surface MUST be flawless.
b The pipe end MUST be evenly flared in a perfect circle.
c Make sure the flare nut is fitted.

7.3.6 To braze the pipe end

The indoor unit and outdoor unit have flare connections. Connect both ends without brazing. If brazing should be needed, take the following into account:

- When brazing, blow through with nitrogen to prevent creation of large quantities of oxidised film on the inside of the piping. This film adversely affects valves and compressors in the refrigerating system and prevents proper operation.
- Set the nitrogen pressure to 20 kPa (0.2 bar) (just enough so it can be felt on the skin) with a pressure-reducing valve.

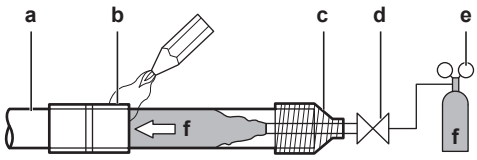

a Refrigerant piping
b Part to be brazed
c Taping
d Manual valve
e Pressure-reducing valve
f Nitrogen

- Do NOT use anti-oxidants when brazing pipe joints.
  Residue can clog pipes and break equipment.

- Do NOT use flux when brazing copper-to-copper refrigerant piping. Use phosphor copper brazing filler alloy (BCuP), which does not require flux.
  Flux has an extremely harmful influence on refrigerant piping systems. For instance, if chlorine based flux is used, it will cause pipe corrosion or, in particular, if the flux contains fluorine, it will deteriorate the refrigerant oil.
- Always protect the surrounding surfaces (e.g. insulation foam) from heat when brazing.

7.3.7 Using the stop valve and service port

CAUTION

Do NOT open the valves before flaring is complete. This would cause refrigerant gas leakage.

To handle the stop valve

Take the following guidelines into account:

- The stop valves are factory closed.
- The following figure shows the stop valve parts required when handling the valve.

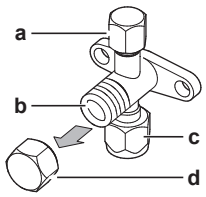

a Service port and service port cap
b Valve stem
c Field piping connection
d Stem cap

- Keep both stop valves open during operation.
- Do NOT apply excessive force to the valve stem. Doing so may break the valve body.
- ALWAYS make sure to secure the stop valve with a spanner, then loosen or tighten the flare nut with a torque wrench. Do NOT place the spanner on the stem cap, as this could cause a refrigerant leak.

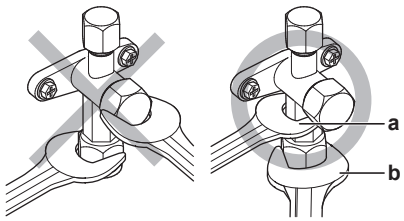

a Spanner
b Torque wrench

- When it is expected that the operating pressure will be low (e.g. when cooling will be performed while the outside air temperature is low), sufficiently seal the flare nut in the stop valve on the gas line with silicon sealant to prevent freezing.

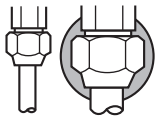

Silicon sealant, make sure there is no gap.

To open/close the stop valve

1 Remove the stop valve cover.

2 Insert a hexagon wrench (liquid side: 4 mm, gas side: 4 mm) into the valve stem and turn the valve stem:

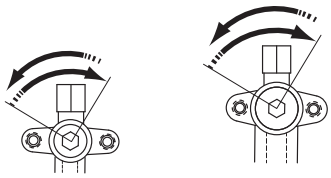

Counterclockwise to open
Clockwise to close

3 When the stop valve CANNOT be turned any further, stop turning.

4 Install the stop valve cover.

Result: The valve is now open/closed.

To handle the stem cap

- The stem cap is sealed where indicated with the arrow. Do NOT damage it.

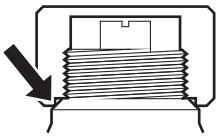

- After handling the stop valve, tighten the stem cap, and check for refrigerant leaks.

Item	Tightening torque (N·m)
Stem cap, liquid side	14.2~17.2
Stem cap, gas side	22~28

To handle the service cap

- ALWAYS use a charge hose equipped with a valve depressor pin, since the service port is a Schrader type valve.
- After handling the service port, tighten the service port cap, and check for refrigerant leaks.

Item	Tightening torque (N·m)
Service port cap	11~14

7.3.8 To connect the refrigerant piping to the outdoor unit

- **Piping length.** Keep field piping as short as possible.
- **Piping protection.** Protect the field piping against physical damage.

1 Connect the liquid refrigerant connection from the indoor unit to the liquid stop valve of the outdoor unit.

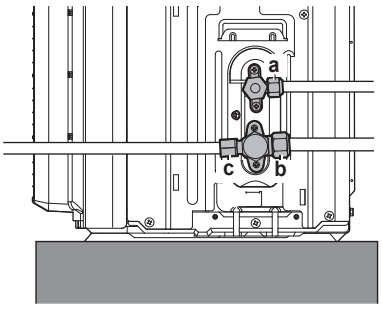

a Liquid stop valve
b Gas stop valve
c Service port

2 Connect the gas refrigerant connection from the indoor unit to the gas stop valve of the outdoor unit.

> **NOTICE**
> It is recommended that the refrigerant piping between indoor and outdoor unit is installed in a ducting or the refrigerant piping is wrapped with finishing tape.

7.3.9 To connect the refrigerant piping to the indoor unit

1 Connect the liquid stop valve from the outdoor unit to the refrigerant liquid connection of the indoor unit.

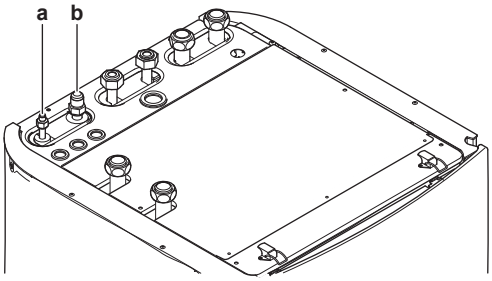

a Refrigerant liquid connection
b Refrigerant gas connection

2 Connect the gas stop valve from the outdoor unit to the refrigerant gas connection of the indoor unit.

> **NOTICE**
> It is recommended that the refrigerant piping between indoor and outdoor unit is installed in a ducting or the refrigerant piping is wrapped with finishing tape.

7.4 Checking the refrigerant piping

7.4.1 About checking the refrigerant piping

The outdoor unit's **internal** refrigerant piping has been factory tested for leaks. You only have to check the outdoor unit's **external** refrigerant piping.

Before checking the refrigerant piping

Make sure the refrigerant piping is connected between the outdoor unit and the indoor unit.

Typical workflow

Checking the refrigerant piping typically consists of the following stages:

1 Checking for leaks in the refrigerant piping.
2 Performing vacuum drying to remove all moisture, air or nitrogen from the refrigerant piping.

If there is a possibility of moisture being present in the refrigerant piping (for example, water may have entered the piping), first carry out the vacuum drying procedure below until all moisture has been removed.

7.4.2 Precautions when checking the refrigerant piping

INFORMATION

Also read the precautions and requirements in the following chapters:

- "1 General safety precautions" [▸ 6]
- "7.1 Preparing refrigerant piping" [▸ 53]

NOTICE

Use a 2-stage vacuum pump with a non-return valve that can evacuate to a gauge pressure of −100.7 kPa (−1.007 bar)(5 Torr absolute). Make sure the pump oil does not flow oppositely into the system while the pump is not working.

NOTICE

Use this vacuum pump for R32 exclusively. Using the same pump for other refrigerants may damage the pump and the unit.

NOTICE

- Connect the vacuum pump to the service port of the gas stop valve.
- Make sure that the gas stop valve and liquid stop valve are firmly closed before performing the leak test or vacuum drying.

7.4.3 To check for leaks

NOTICE

Do NOT exceed the unit's maximum working pressure (see "PS High" on the unit name plate).

NOTICE

Make sure to use a recommended bubble test solution from your wholesaler. Do not use soap water, which may cause cracking of flare nuts (soap water may contain salt, which absorbs moisture that will freeze when the piping gets cold), and/or lead to corrosion of flared joints (soap water may contain ammonia which causes a corrosive effect between the brass flare nut and the copper flare).

1 Charge the system with nitrogen gas up to a gauge pressure of at least 200 kPa (2 bar). It is recommended to pressurize to 3000 kPa (30 bar) in order to detect small leaks.

2 Check for leaks by applying the bubble test solution to all connections.

3 Discharge all nitrogen gas.

7.4.4 To perform vacuum drying

Connect the vacuum pump and manifold as follows:

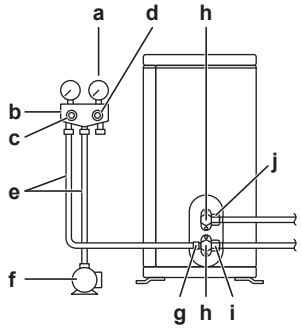

- **a** Pressure meter
- **b** Gauge manifold
- **c** Low pressure valve (Lo)
- **d** High-pressure valve (Hi)
- **e** Charging hoses
- **f** Vacuum pump
- **g** Service port
- **h** Valve lids
- **i** Gas stop valve
- **j** Liquid stop valve

1. Vacuum the system until the pressure on the manifold indicates −0.1 MPa (−1 bar).
2. Leave as is for 4-5 minutes and check the pressure:

If the pressure...	Then...
Does not change	There is no moisture in the system. This procedure is finished.
Increases	There is moisture in the system. Go to the next step.

3. Vacuum the system for at least 2 hours to a manifold pressure of −0.1 MPa (−1 bar).
4. After turning the pump OFF, check the pressure for at least 1 hour.
5. If you do NOT reach the target vacuum or CANNOT maintain the vacuum for 1 hour, do the following:
   - Check for leaks again.
   - Perform vacuum drying again.

NOTICE

Make sure to open the stop valves after installing the refrigerant piping and performing vacuum drying. Running the system with the stop valves closed may break the compressor.

INFORMATION

After opening the stop valve, it is possible that the pressure in the refrigerant piping does NOT increase. This might be caused by e.g. the closed state of the expansion valve in the outdoor unit circuit, but does NOT present any problem for correct operation of the unit.

7.5 Charging refrigerant

7.5.1 About charging refrigerant

The outdoor unit is factory charged with refrigerant, but in some cases you may need to completely recharge refrigerant.

Example:

- When relocating the system.
- After a leak.

Completely recharging refrigerant

Before completely recharging refrigerant, make sure the following is done:

1. All refrigerant is recovered from the system.
2. The outdoor unit's **external** refrigerant piping is checked (leak test, vacuum drying).
3. Vacuum drying on the outdoor unit's **internal** refrigerant piping is performed.

> **NOTICE**
>
> Before completely recharging, perform vacuum drying on the outdoor unit's **internal** refrigerant piping as well.

Typical workflow – Completely recharging refrigerant typically consists of the following stages:

1. Determining how much refrigerant to charge.
2. Charging refrigerant.
3. Filling in the fluorinated greenhouse gases label, and fixing it to the inside of the outdoor unit.

7.5.2 About the refrigerant

This product contains fluorinated greenhouse gases. Do NOT vent gases into the atmosphere.

Refrigerant type: R32

Global warming potential (GWP) value: 675

> **NOTICE**
>
> Applicable legislation on **fluorinated greenhouse gases** requires that the refrigerant charge of the unit is indicated both in weight and CO_2 equivalent.
>
> **Formula to calculate the quantity in CO_2 equivalent tonnes:** GWP value of the refrigerant × total refrigerant charge [in kg] / 1000
>
> Please contact your installer for more information.

> **WARNING: FLAMMABLE MATERIAL**
>
> The refrigerant inside this unit is mildly flammable.

WARNING

The appliance shall be stored in a room without continuously operating ignition sources (example: open flames, an operating gas appliance or an operating electric heater).

WARNING

- Do NOT pierce or burn refrigerant cycle parts.
- Do NOT use cleaning materials or means to accelerate the defrosting process other than those recommended by the manufacturer.
- Be aware that the refrigerant inside the system is odourless.

WARNING

The refrigerant inside the unit is mildly flammable, but normally does NOT leak. If the refrigerant leaks in the room and comes in contact with fire from a burner, a heater, or a cooker, this may result in fire, or the formation of a harmful gas.

Turn off any combustible heating devices, ventilate the room, and contact the dealer where you purchased the unit.

Do NOT use the unit until a service person confirms that the part from which the refrigerant leaked has been repaired.

7.5.3 Precautions when charging refrigerant

INFORMATION

Also read the precautions and requirements in the following chapters:

- "1 General safety precautions" [▸ 6]
- "7.1 Preparing refrigerant piping" [▸ 53]

7.5.4 To determine the complete recharge amount

INFORMATION

If a complete recharge is necessary, the total refrigerant charge is equal to the factory refrigerant charge (see unit name plate).

7.5.5 To fix the fluorinated greenhouse gases label

1 Fill in the label as follows:

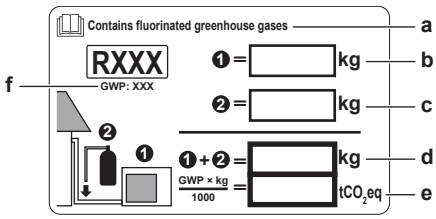

a	If a multilingual fluorinated greenhouse gases label is delivered with the unit (see accessories), peel off the applicable language and stick it on top of **a**.
b	Factory refrigerant charge: see unit name plate
c	Additional refrigerant amount charged
d	Total refrigerant charge
e	**Quantity of fluorinated greenhouse gases** of the total refrigerant charge expressed as tonnes CO_2 equivalent.
f	GWP = Global warming potential

NOTICE

Applicable legislation on **fluorinated greenhouse gases** requires that the refrigerant charge of the unit is indicated both in weight and CO_2 equivalent.

Formula to calculate the quantity in CO_2 equivalent tonnes: GWP value of the refrigerant × total refrigerant charge [in kg] / 1000

Use the GWP value mentioned on the refrigerant charge label. That GWP is based on the current legislation on fluorinated greenhouse gases. The GWP mentioned in the manual might be outdated.

2 Fix the label on the inside of the outdoor unit near the gas and liquid stop valves.

7.6 Connecting water piping

7.6.1 About connecting the water piping

Before connecting the water piping

Make sure the outdoor and indoor unit are mounted.

Typical workflow

Connecting the water piping typically consists of the following stages:

1. Connecting the water piping to the indoor unit.
2. Connecting the recirculation piping.
3. Connecting the drain hose to the drain.
4. Filling the water circuit.
5. Filling the domestic hot water tank.
6. Insulating the water piping.

7.6.2 Precautions when connecting the water piping

INFORMATION

Also read the precautions and requirements in the following chapters:

- "1 General safety precautions" [▸ 6]
- "7.2 Preparing water piping" [▸ 54]

7.6.3 To connect the water piping

NOTICE

Do NOT use excessive force when connecting the piping. Deformation of the piping can cause malfunctioning of the unit.

To facilitate service and maintenance, 4 shut-off valves and 1 overpressure bypass valve are provided. Mount the shut-off valves on the space heating water inlets and space heating water outlets. To ensure the minimum flow rate (and prevent overpressure), install the **overpressure bypass valve** on the space heating water outlet for the **additional zone**.

NOTICE

This unit is designed for operation on 2 temperature zones:

- underfloor heating in the **main zone**, this is the zone with the **lowest water temperature**,
- radiators in the **additional zone**, this is the zone with the **highest water temperature**.

1 Install the shut-off valves on the space heating water pipes.

2 Screw the indoor unit nuts on the shut-off valve.

3 Connect the domestic hot water in and out pipes to the indoor unit.

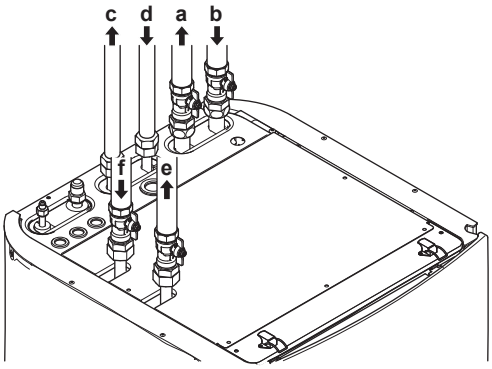

a	Space heating additional zone water out
b	Space heating additional zone water in
c	Domestic hot water out
d	Domestic cold water in (cold water supply)
e	Space heating main zone water out
f	Space heating main zone water in

NOTICE

It is recommended to install shut-off valves to domestic cold water in and domestic hot water out connections. These shut-off valves are field supplied.

NOTICE

To avoid damage to the surroundings in case of water leakage, it is recommended to close the domestic cold water inlet shut-off valves during periods of absence.

NOTICE

Overpressure bypass valve (delivered as accessory). We recommend to install the overpressure bypass valve in the space heating water circuit.

Mind the minimum flow rate when adjusting the overpressure bypass valve setting. See "7.2.3 To check the water volume and flow rate" [▸ 57] and "10.4.1 To check the minimum flow rate" [▸ 143].

NOTICE

If you install this unit as a single-zone application, then:

Setup. Install a bypass between the space heating water inlet and outlet of the additional zone (=direct zone). Do NOT interrupt the water flow by closing the shut-off valves.

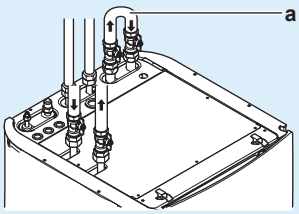

a Bypass

Configuration. Set field setting [7-02]=0 (`Number of LWT zones` = `1 LWT zone`).

NOTICE

Install air purge valves at all local high points.

NOTICE

A pressure relief valve (field supply) with an opening pressure of maximum 10 bar (=1 MPa) must be installed on the domestic cold water inlet connection in accordance with the applicable legislation.

NOTICE

- A drain device and pressure relief device must be installed on the cold water inlet connection of the domestic hot water cylinder.
- To avoid back siphonage, it is recommended to install a non-return valve on the water inlet of the domestic hot water tank in accordance with the applicable legislation.
- It is recommended to install a pressure reducing valve on the cold water inlet in accordance with the applicable legislation.
- An expansion vessel should be installed on the cold water inlet in accordance with the applicable legislation.
- It is recommended to install the pressure relief valve on a higher position than the top of the domestic hot water tank. Heating of the domestic hot water tank causes water to expand and without pressure relief valve the water pressure inside the tank can rise above the tank design pressure. Also the field installation (piping, tapping points, etc.) connected to the tank is subjected to this high pressure. To prevent this, a pressure relief valve needs to be installed. The overpressure prevention depends on the correct operation of the field installed pressure relief valve. If this is NOT working correctly, overpressure will deform the tank and water leakage may occur. To confirm good operation, regular maintenance is required.

7.6.4 To connect the recirculation piping

Prerequisite: Only required if you need recirculation in your system.

1. Remove the top panel from the unit, see "6.2.4 To open the indoor unit" [▸ 44].
2. Cut out the rubber grommet on top of the unit, and remove the stop. The recirculation connector is placed below the hole.
3. Route the recirculation piping through the grommet and connect it to the recirculation connector.

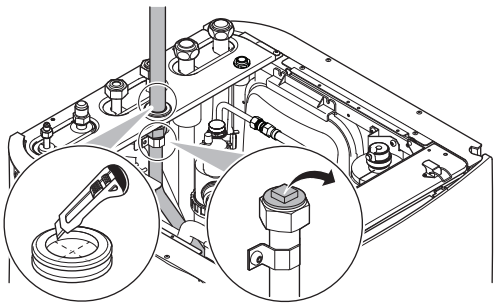

4 Reattach the top panel.

7.6.5 To fill the water circuit

To fill the water circuit, use a field supply filling kit. Make sure you comply with the applicable legislation.

> **INFORMATION**
>
> Make sure both air purge valves (one on the magnetic filter and one on the backup heater) are open.

7.6.6 To fill the domestic hot water tank

1. Open every hot water tap in turn to purge air from the system pipe work.
2. Open the cold water supply valve.
3. Close all water taps after all air is purged.
4. Check for water leaks.
5. Manually operate the field-installed pressure relief valve to ensure a free water flow through the discharge pipe.

7.6.7 To insulate the water piping

The piping in the complete water circuit MUST be insulated to prevent condensation during defrost operation and reduction of the heating capacity.

If the temperature is higher than 30°C and the humidity is higher than RH 80%, the thickness of the insulation materials should be at least 20 mm to prevent condensation on the surface of the insulation.

8 Electrical installation

WARNING

Make sure that the electrical wiring does NOT touch the refrigerant gas pipe, which can be very hot.

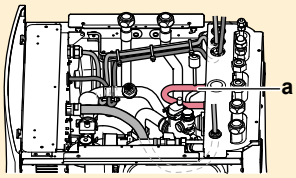

a Refrigerant gas pipe

In this chapter

8.1 About connecting the electrical wiring ... 75
8.1.1 Precautions when connecting the electrical wiring ... 75
8.1.2 Guidelines when connecting the electrical wiring ... 76
8.1.3 Specifications of standard wiring components ... 77
8.1.4 About electrical compliance ... 78
8.1.5 About preferential kWh rate power supply ... 78
8.1.6 Overview of electrical connections except external actuators ... 79
8.2 Connections to the outdoor unit ... 79
8.2.1 To connect the electrical wiring to the outdoor unit ... 79
8.3 Connections to the indoor unit ... 80
8.3.1 To connect the main power supply ... 82
8.3.2 To connect the backup heater power supply ... 84
8.3.3 To connect the user interface ... 86
8.3.4 To connect the shut-off valve ... 87
8.3.5 To connect the electricity meters ... 88
8.3.6 To connect the domestic hot water pump ... 89
8.3.7 To connect the alarm output ... 90
8.3.8 To connect the space heating ON/OFF output ... 91
8.3.9 To connect the changeover to external heat source ... 92
8.3.10 To connect the power consumption digital inputs ... 93
8.3.11 To connect the safety thermostat (normally closed contact) ... 94
8.4 After connecting the electrical wiring to the indoor unit ... 96

8.1 About connecting the electrical wiring

Before connecting the electrical wiring

Make sure:

- The refrigerant piping is connected and checked
- The water piping is connected

Typical workflow

Connecting the electrical wiring typically consists of the following stages:

- "8.2 Connections to the outdoor unit" [▶ 79]
- "8.3 Connections to the indoor unit" [▶ 80]

8.1.1 Precautions when connecting the electrical wiring

DANGER: RISK OF ELECTROCUTION

INFORMATION

Also read the precautions and requirements in the "General safety precautions" chapter.

WARNING

- All wiring MUST be performed by an authorised electrician and MUST comply with the applicable legislation.
- Make electrical connections to the fixed wiring.
- All components procured on-site and all electrical construction MUST comply with the applicable legislation.

WARNING

- If the power supply has a missing or wrong N-phase, equipment might break down.
- Establish proper earthing. Do NOT earth the unit to a utility pipe, surge absorber, or telephone earth. Incomplete earthing may cause electrical shock.
- Install the required fuses or circuit breakers.
- Secure the electrical wiring with cable ties so that the cables do NOT come in contact with sharp edges or piping, particularly on the high-pressure side.
- Do NOT use taped wires, stranded conductor wires, extension cords, or connections from a star system. They can cause overheating, electrical shock or fire.
- Do NOT install a phase advancing capacitor, because this unit is equipped with an inverter. A phase advancing capacitor will reduce performance and may cause accidents.

CAUTION

Do NOT push or place redundant cable length in the unit.

NOTICE

The distance between the high voltage and low voltage cables should be at least 50 mm.

WARNING

ALWAYS use multicore cable for power supply cables.

8.1.2 Guidelines when connecting the electrical wiring

Keep the following in mind:

- If stranded conductor wires are used, install a round crimp-style terminal on the end of the wire. Place the round crimp-style terminal on the wire up to the covered part and fasten the terminal with the appropriate tool.

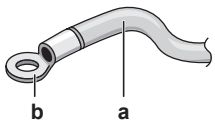

a Stranded conductor wire
b Round crimp-style terminal

- Use the following methods for installing wires:

Wire type	Installation method
Single-core wire	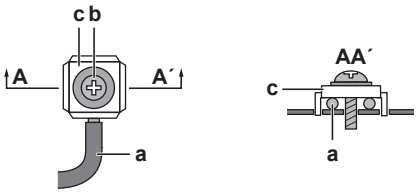 **a** Curled single-core wire **b** Screw **c** Flat washer
Stranded conductor wire with round crimp-style terminal	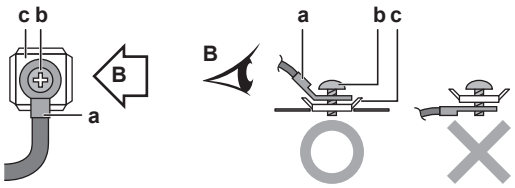 **a** Terminal **b** Screw **c** Flat washer **O** Allowed **X** NOT allowed

Tightening torques

Outdoor unit:

Item	Tightening torque (N•m)
M4 (X1M)	1.2~1.5
M4 (earth)	1.2~1.5

Indoor unit:

Item	Tightening torque (N•m)
M4 (X1M, X2M, X5M)	1.2~1.5
M4 (earth)	1.2~1.5

8.1.3 Specifications of standard wiring components

Component		
Power supply cable	MCA[(a)]	13.0 A
	Voltage	230 V
	Phase	1~
	Frequency	50 Hz
	Wire sizes	Must comply with applicable legislation
Interconnection cable		Minimum cable section of 1.5 mm² and applicable for 230 V
Recommended field fuse		16 A
Earth leakage circuit breaker		Must comply with applicable legislation

[a] MCA=Minimum circuit ampacity. Stated values are maximum values (see electrical data of combination with indoor units for exact values).

8.1.4 About electrical compliance

Only for ERLA03DAV3

Equipment complying with EN/IEC 61000-3-2 (European/International Technical Standard setting the limits for harmonic currents produced by equipment connected to public low-voltage systems with input current ≤16 A per phase.).

Only for the backup heater of the indoor unit

See "8.3.2 To connect the backup heater power supply" [▸ 84].

8.1.5 About preferential kWh rate power supply

Electricity companies throughout the world work hard to provide reliable electric service at competitive prices and are often authorized to bill clients at benefit rates. E.g. time-of-use rates, seasonal rates, Wärmepumpentarif in Germany and Austria, ...

This equipment allows for connection to such preferential kWh rate power supply delivery systems.

Consult with the electricity company acting as provider at the site where this equipment is to be installed to know whether it is appropriate to connect the equipment in one of the preferential kWh rate power supply delivery systems available, if any.

When the equipment is connected to such preferential kWh rate power supply, the electricity company is allowed to:

- interrupt power supply to the equipment for certain periods of time;
- demand that the equipment only consumes a limited amount of electricity during certain periods of time.

The indoor unit is designed to receive an input signal by which the unit switches into forced off mode. At that moment, the outdoor unit compressor will not operate.

The wiring to the unit is different depending on whether the power supply is interrupted or not.

8.1.6 Overview of electrical connections except external actuators

Normal power supply	Preferential kWh rate power supply	
	Power supply is NOT interrupted	Power supply is interrupted
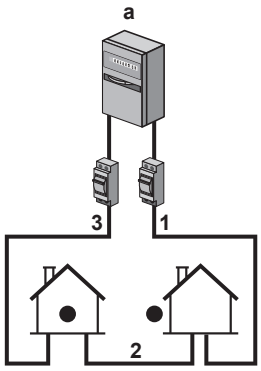	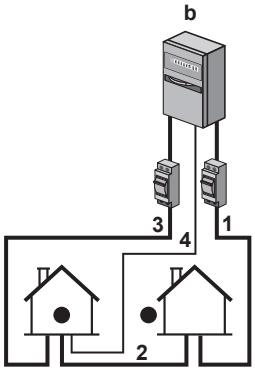 During preferential kWh rate power supply activation, power supply is NOT interrupted. The outdoor unit is turned off by the control. **Remark:** The electricity company must always allow the power consumption of the indoor unit.	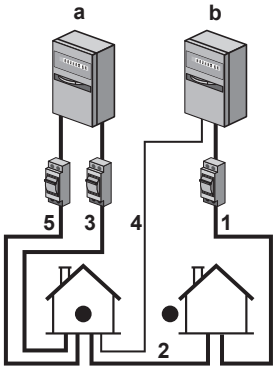 During preferential kWh rate power supply activation, power supply is interrupted immediately or after some time by the electricity company. In this case, the indoor unit must be powered by a separate normal power supply.

a Normal power supply

b Preferential kWh rate power supply

1 Power supply for outdoor unit

2 Power supply and interconnection cable to indoor unit

3 Power supply for backup heater

4 Preferential kWh rate power supply (voltage free contact)

5 Normal kWh rate power supply (to power the indoor unit PCB in the event of power supply interruption of the preferential kWh rate power supply)

8.2 Connections to the outdoor unit

Item	Description
Power supply cable	See "8.2.1 To connect the electrical wiring to the outdoor unit" [▶ 79].
Interconnection cable	

8.2.1 To connect the electrical wiring to the outdoor unit

1. Remove the service cover. See "6.2.2 To open the outdoor unit" [▶ 43].
2. Strip insulation (20 mm) from the wires.

a Strip wire end to this point
b An excessive strip length may cause electrical shock or leakage

3 Open the wire clamp.

4 Connect the interconnection cable and power supply as follows:

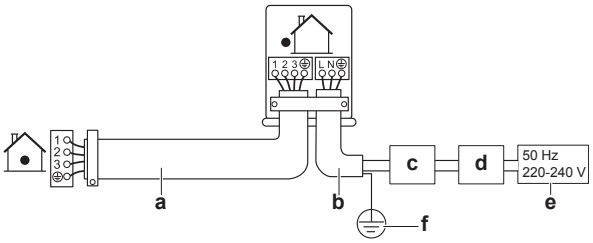

a Interconnection cable
b Power supply cable
c Circuit breaker
d Earth leakage circuit breaker
e Power supply
f Earth

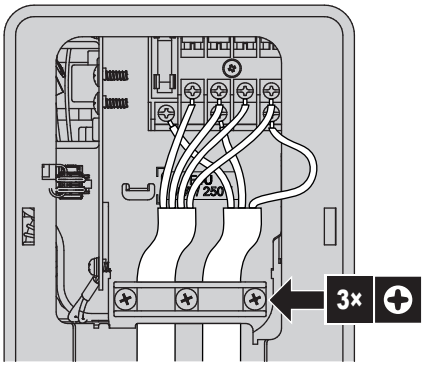

5 Tighten the terminal screws securely. We recommend using a Phillips screwdriver.

8.3 Connections to the indoor unit

Item	Description
Power supply (main)	See "8.3.1 To connect the main power supply" [▶ 82].
Power supply (backup heater)	See "8.3.2 To connect the backup heater power supply" [▶ 84].
User interface	See "8.3.3 To connect the user interface" [▶ 86].
Shut-off valve	See "8.3.4 To connect the shut-off valve" [▶ 87].
Electricity meters	See "8.3.5 To connect the electricity meters" [▶ 88].
Domestic hot water pump	See "8.3.6 To connect the domestic hot water pump" [▶ 89].
Alarm output	See "8.3.7 To connect the alarm output" [▶ 90].
Space heating operation control	See "8.3.8 To connect the space heating ON/OFF output" [▶ 91].
Changeover to external heat source control	See "8.3.9 To connect the changeover to external heat source" [▶ 92].

Item	Description	
Power consumption digital inputs	See "8.3.10 To connect the power consumption digital inputs" [▸ 93].	
Safety thermostat	See "8.3.11 To connect the safety thermostat (normally closed contact)" [▸ 94].	
Room thermostat (wired or wireless)		See: ▪ Installation manual of the **wireless room thermostat** ▪ Installation manual of the **wired room thermostat (digital or analogue) + multi-zoning base unit** - Connection of the wired room thermostat (digital or analogue) to the multi-zoning base unit - Connection of the multi-zoning base unit to the indoor unit ▪ Addendum book for optional equipment
		Wires for wired room thermostat: 2×0.75 mm² Wires for wireless room thermostat: 4×0.75 mm² Maximum running current: 100 mA
		For the main zone: ▪ [A.2.1.7] `Unit control method` ▪ [A.2.2.4] `Contact type main` For the additional zone: ▪ [A.2.2.5] `Contact type add.`
Heat pump convector		There are different controllers and setups possible for the heat pump convectors. For more information, see: ▪ Installation manual of the heat pump convectors ▪ Addendum book for optional equipment
		Wires: 4×0.75 mm² Maximum running current: 100 mA
		For the main zone: ▪ [A.2.1.7] `Unit control method` ▪ [A.2.2.4] `Contact type main` For the additional zone: ▪ [A.2.2.5] `Contact type add.`

Item	Description
Remote outdoor sensor	See: ▪ Installation manual of the remote outdoor sensor ▪ Addendum book for optional equipment
	Wires: 2×0.75 mm²
	[A.2.2.B]=1 (`External sensor=Outdoor sensor`) [A.6.5] `Ext amb. sensor offset` [A.6.4] `Averaging time`
Remote indoor sensor	See: ▪ Installation manual of the remote indoor sensor ▪ Addendum book for optional equipment
	Wires: 2×0.75 mm²
	[A.2.2.F.5]=2 (`External sensor=Room sensor`) [A.3.2.3] `Ext. room sensor offset`
LAN adapter	See: ▪ Installation manual of the LAN adapter ▪ Addendum book for optional equipment
	Wires: 2×(0.75~1.25 mm²). Must be sheathed. Maximum length: 200 m
	See "LAN adapter – System requirements" [▸ 82]

LAN adapter – System requirements

The requirements posed on the Daikin Altherma system depend on the LAN adapter application/system layout (app control):

Item	Requirement
LAN adapter software	It is recommended to ALWAYS keep the LAN adapter software up-to-date.
Unit control method	On the user interface, make sure to set [A.2.1.7]=2 (`Unit control method` = `RT control`)

8.3.1 To connect the main power supply

1 Open the following (see "6.2.4 To open the indoor unit" [▸ 44]):

1	Top panel	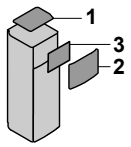
2	Upper front panel	
3	Upper switch box cover	

2 Connect the main power supply.

In case of normal kWh rate power supply

	Interconnection cable (= main power supply)	Wires: (3+GND)×1.5 mm²
	—	

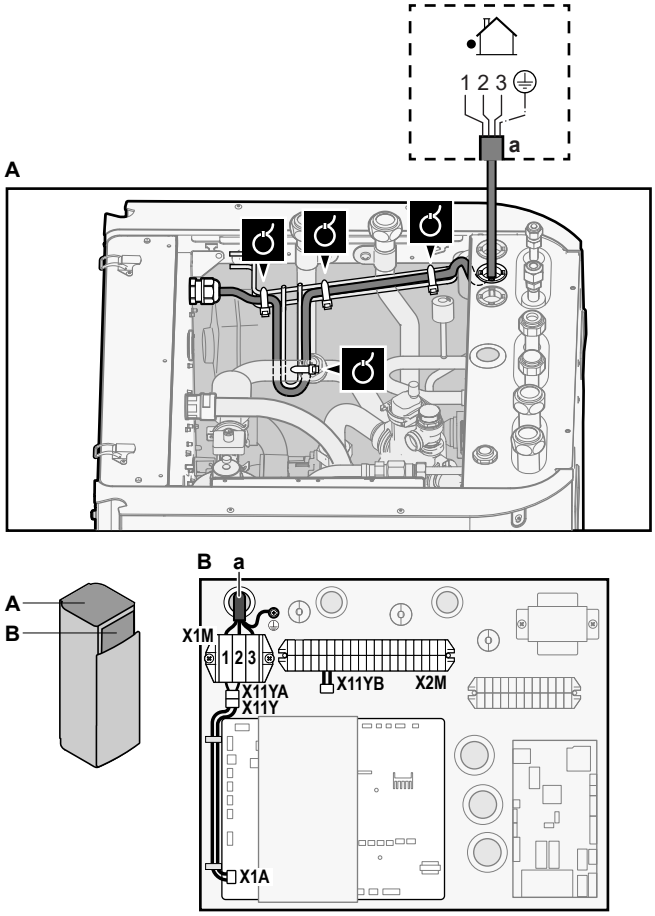

a Interconnection cable (=main power supply)

In case of preferential kWh rate power supply

	Interconnection cable (= main power supply)	Wires: (3+GND)×1.5 mm²
	Normal kWh rate power supply	Wires: 1N Maximum running current: 6.3 A
	Preferential kWh rate power supply contact	Wires: 2×(0.75~1.25 mm²) Maximum length: 50 m. Preferential kWh rate power supply contact: 16 V DC detection (voltage supplied by PCB). The voltage-free contact shall ensure the minimum applicable load of 15 V DC, 10 mA.
	[A.2.2.E.3] `Preferential kWh rate`	

Connect X11Y to X11YB.

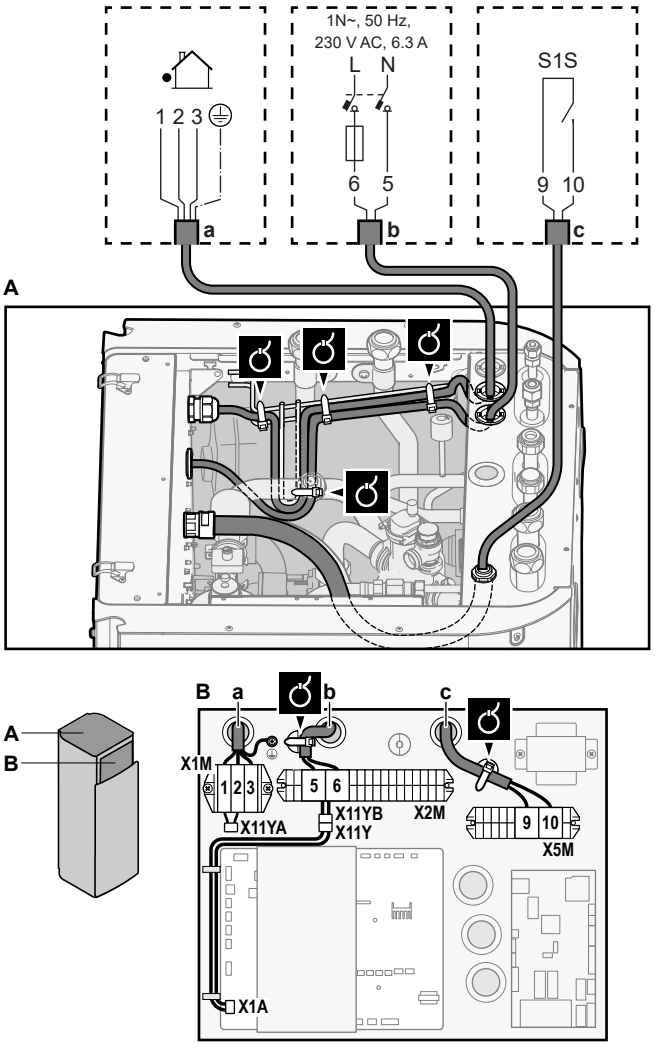

a Interconnection cable (=main power supply)
b Normal kWh rate power supply
c Preferential power supply contact

3 Fix the cables with cable ties to the cable tie mountings.

> **INFORMATION**
>
> In case of preferential kWh rate power supply, connect X11Y to X11YB. The necessity of separate normal kWh rate power supply to indoor unit (b) X2M/5+6 depends on the type of preferential kWh rate power supply.
>
> Separate connection to the indoor unit is required:
>
> - if preferential kWh rate power supply is interrupted when active, OR
> - if no power consumption of the indoor unit is allowed at the preferential kWh rate power supply when active.

> **INFORMATION**
>
> The preferential kWh rate power supply contact is connected to the same terminals (X5M/9+10) as the safety thermostat for the additional zone. It is only possible for the system to have EITHER preferential kWh rate power supply OR a safety thermostat for the additional zone.

8.3.2 To connect the backup heater power supply

	Backup heater type	Power supply	Wires
	*3V	1N~ 230 V	2+GND

—

WARNING

The backup heater MUST have a dedicated power supply and MUST be protected by the safety devices required by the applicable legislation.

CAUTION

To guarantee the unit is completely earthed, always connect the backup heater power supply and the earth cable.

Make sure that the power supply is in accordance with the backup heater capacity, as listed in the table below.

Backup heater type	Backup heater capacity	Power supply	Maximum running current	Z_{max}
*3V	3 kW	1N~ 230 V	13 A[(a)]	0.34 Ω

[(a)] This equipment complies with EN/IEC 61000-3-11 (European/International Technical Standard setting the limits for voltage changes, voltage fluctuations and flicker in public low-voltage supply systems for equipment with rated current ≤75 A) provided that the system impedance Z_{sys} is less than or equal to Z_{max} at the interface point between the user's supply and the public system. It is the responsibility of the installer or user of the equipment to ensure, by consultation with the distribution network operator if necessary, that the equipment is connected only to a supply with a system impedance Z_{sys} less than or equal to Z_{max}.

Connect the power supply of the backup heater as follows:

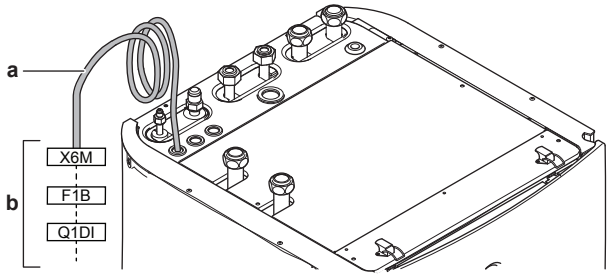

a Factory-mounted cable connected to the contactor of the backup heater, inside the switch box (K1M)
b Field wiring (see table below)

Model (power supply)	Connections to backup heater power supply
*3V (1N~ 230 V)	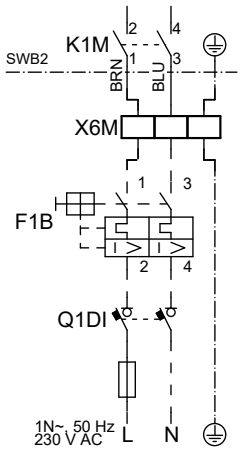

F1B Overcurrent fuse (field supply). Recommended fuse: 2-pole; 16 A; curve 400 V; tripping class C.

K1M Contactor (in the lower switch box)

Q1DI Earth leakage circuit breaker (field supply)

SWB Switch box

X6M Terminal (field supply)

NOTICE

Do NOT cut or remove the backup heater power supply cable.

8.3.3 To connect the user interface

- If you use 1 user interface, you can install it at the indoor unit (for control close to the indoor unit), or in the room (when used as room thermostat).
- If you use 2 user interfaces, you can install 1 user interface at the indoor unit (for control close to the indoor unit) + 1 user interface in the room (used as room thermostat).

	Wires: 2 (per user interface)×(0.75~1.25 mm²) Maximum length: 200 m
	[A.2.1.7] `Unit control method` [A.2.1.B] `User interface location` [A.3.2.2] `Room temp. offset`

1 Open the following (see "6.2.4 To open the indoor unit" [▸ 44]):

1	Top panel	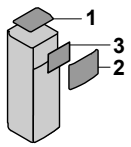
2	Upper front panel	
3	Upper switch box cover	

2 Connect the user interface cable to the indoor unit. Fix the cable with cable ties to the cable tie mountings.

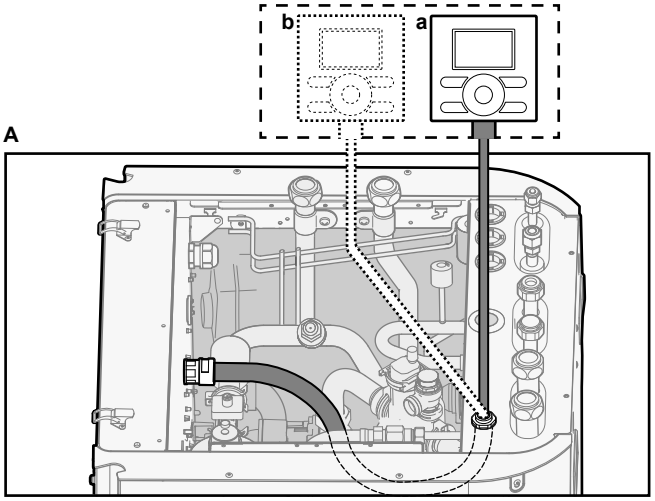

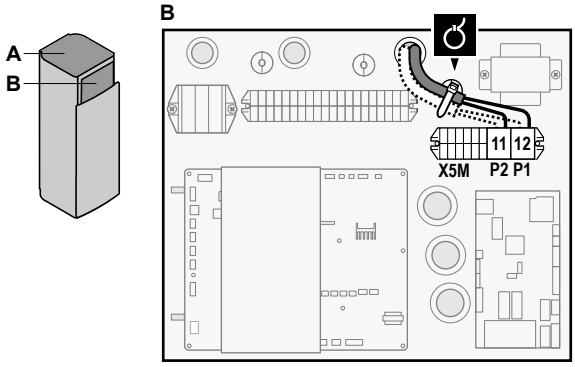

a Main user interface: Required for operation. Delivered with the unit as accessory.
b Optional user interface

3 Insert a screwdriver into the slots underneath the user interface and carefully separate the faceplate from the wallplate. The PCB is mounted in the faceplate of the user interface. Be careful NOT to damage it.

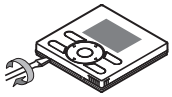

4 Fix the wallplate of the user interface to the wall.

5 Connect as shown in A, B, C or D:

A From the rear 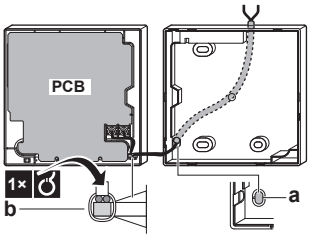	**B** From the left 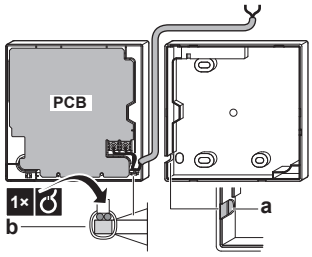
C From the top 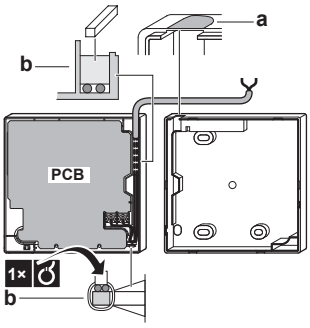	**D** From the top centre 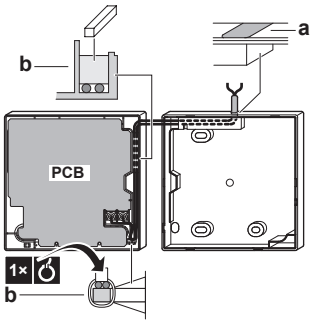

a Notch this part for the wiring to pass through with nippers etc.

b Secure the wiring to the front part of the casing using the wiring retainer and clamp.

6 Reinstall the faceplate onto the wallplate. Be careful NOT to pinch the wiring when attaching the frontplate to the unit.

8.3.4 To connect the shut-off valve

	Wires: 2×0.75 mm² Maximum running current: 100 mA 230 V AC supplied by PCB

	[A.3.1.1.6] `Shut-off valve`

1 Open the following (see "6.2.4 To open the indoor unit" [▶ 44]):

1	Top panel	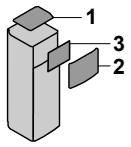
2	Upper front panel	
3	Upper switch box cover	

2 Connect the valve control cable to the appropriate terminals as shown in the illustration below.

NOTICE

Wiring is different for a NC (normally closed) valve and a NO (normally open) valve.

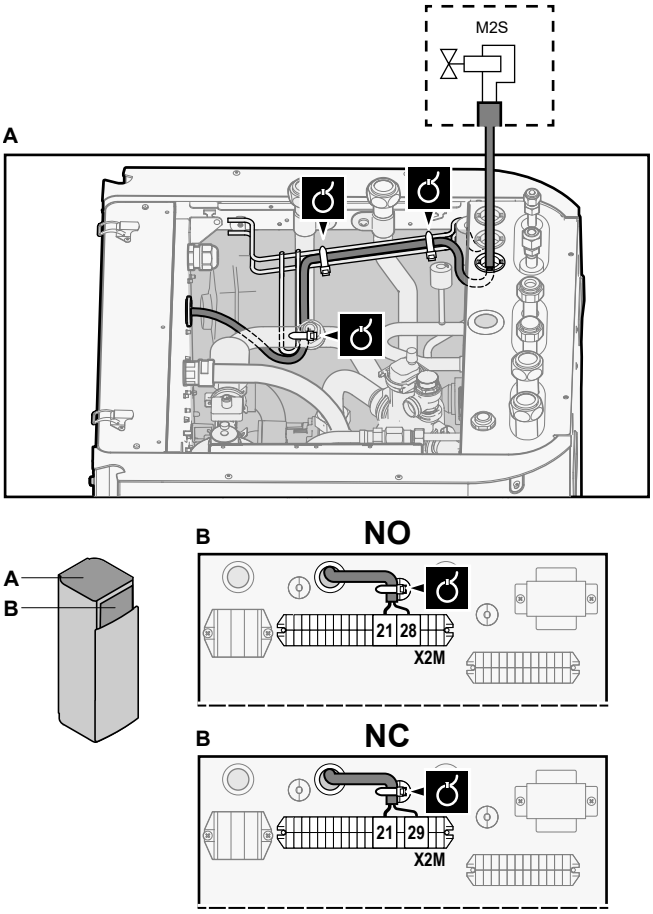

3 Fix the cable with cable ties to the cable tie mountings.

8.3.5 To connect the electricity meters

	Wires: 2 (per meter)×0.75 mm² Electricity meters: 12 V DC pulse detection (voltage supplied by PCB)
	[A.2.2.8] `External kWh meter` (meter 1) [A.2.2.9] `External kWh meter` (meter 2)

> **INFORMATION**
>
> In case of an electricity meter with transistor output, check the polarity. The positive polarity MUST be connected to X5M/6 and X5M/4; the negative polarity to X5M/5 and X5M/3.

1 Open the following (see "6.2.4 To open the indoor unit" [▸ 44]):

1	Top panel	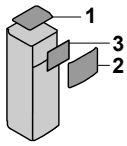
2	Upper front panel	
3	Upper switch box cover	

2 Connect the electricity meters cable to the appropriate terminals as shown in the illustration below.

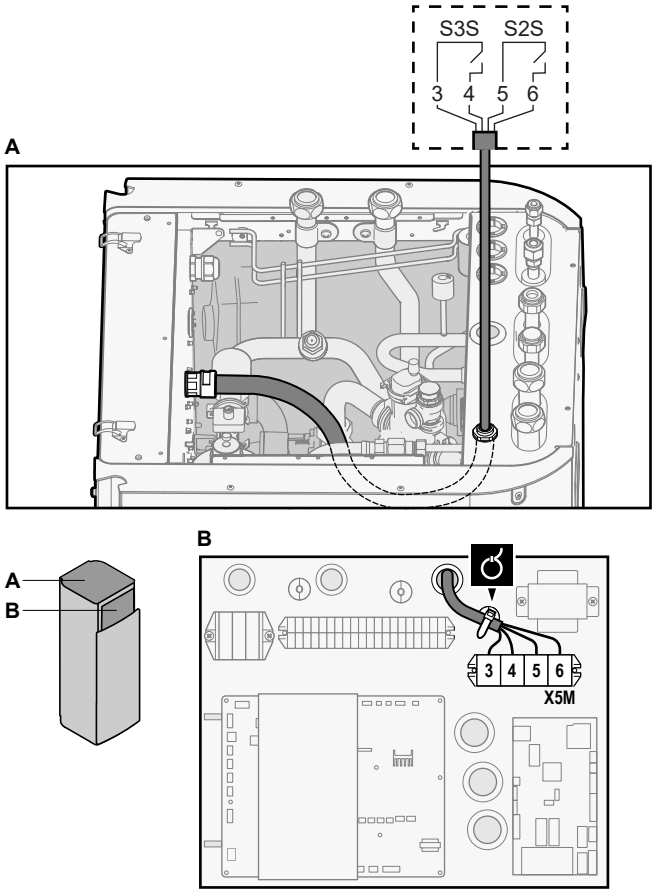

3 Fix the cable with cable ties to the cable tie mountings.

8.3.6 To connect the domestic hot water pump

	Wires: (2+GND)×0.75 mm² DHW pump output. Maximum load: 2 A (inrush), 230 V AC, 1 A (continuous)
	[A.2.2] `Options` > [A.2.2.A] `DHW pump` [7.3] `Set schedules` > [7.3.7] `DHW pump`

1 Open the following (see "6.2.4 To open the indoor unit" [▸ 44]):

1	Top panel	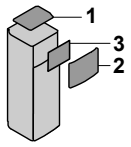
2	Upper front panel	
3	Upper switch box cover	

2 Connect the domestic hot water pump cable to the appropriate terminals as shown in the illustration below.

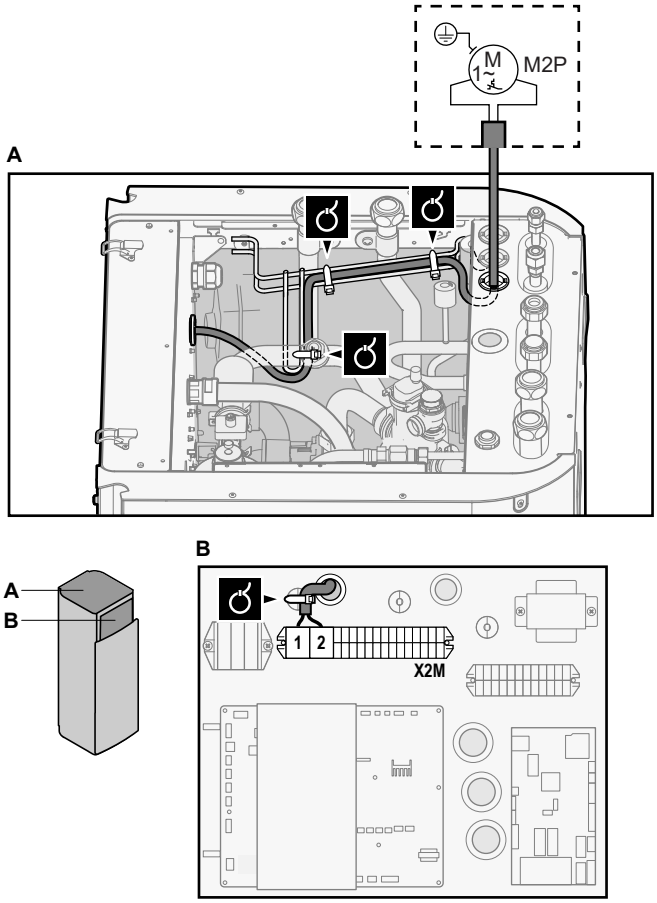

3 Fix the cable with cable ties to the cable tie mountings.

8.3.7 To connect the alarm output

	Wires: (2+1)×0.75 mm² Maximum load: 0.3 A, 250 V AC
	[A.2.2.6.3] `Alarm output`

1 Open the following (see "6.2.4 To open the indoor unit" [▶ 44]):

1	Top panel	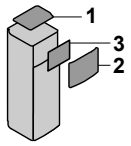
2	Upper front panel	
3	Upper switch box cover	

2 Connect the alarm output cable to the appropriate terminals as shown in the illustration below.

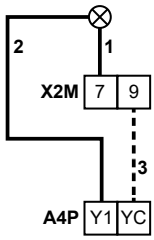	**1+2**	Wires connected to the alarm output
	3	Wire between X2M and A4P
	A4P	Installation of EKRP1HBAA is required.

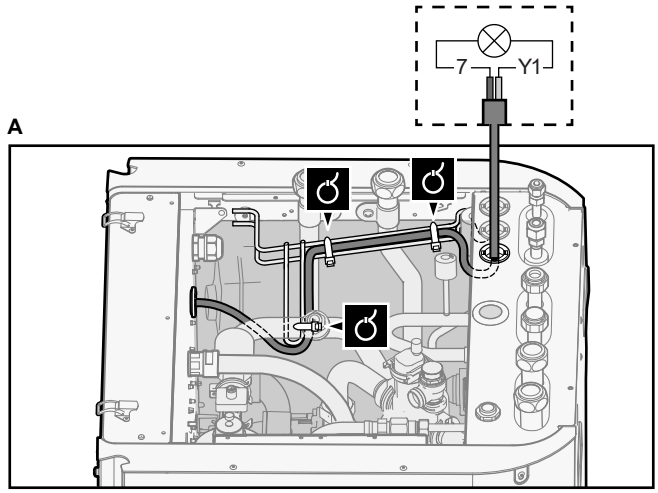

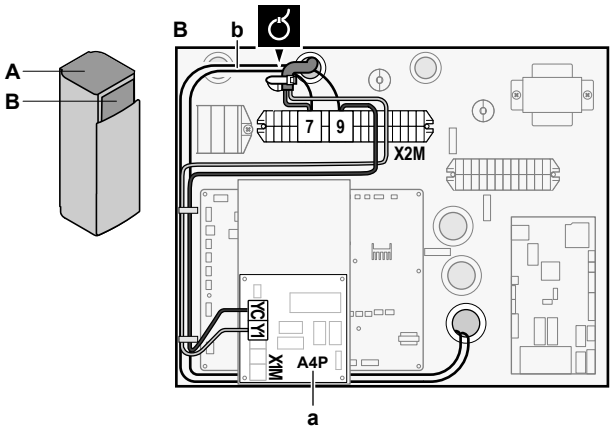

a Installation of EKRP1HBAA is required.
b Prewiring between X2M/7+9 and Q1L (= thermal protector backup heater). Do NOT change.

3 Fix the cable with cable ties to the cable tie mountings.

8.3.8 To connect the space heating ON/OFF output

	Wires: (2+1)×0.75 mm² Maximum load: 0.3 A, 250 V AC
	—

1 Open the following (see "6.2.4 To open the indoor unit" [▶ 44]):

1	Top panel	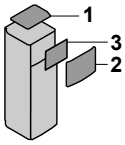
2	Upper front panel	
3	Upper switch box cover	

2 Connect the space heating ON/OFF output cable to the appropriate terminals as shown in the illustration below.

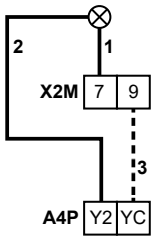	**1+2**	Wires connected to the alarm output
	3	Wire between X2M and A4P
	A4P	Installation of EKRP1HBAA is required.

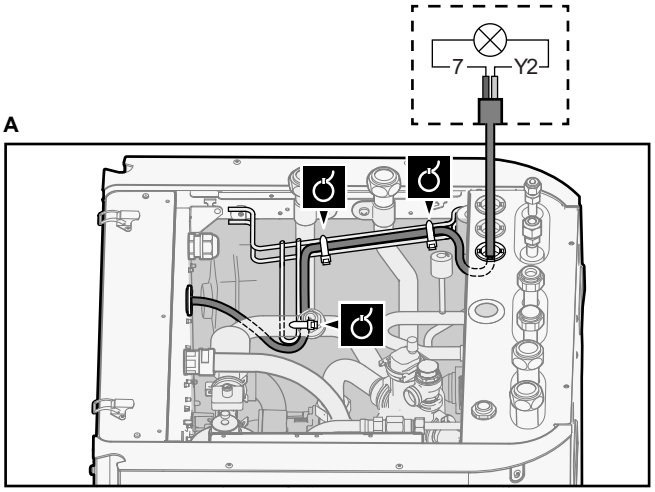

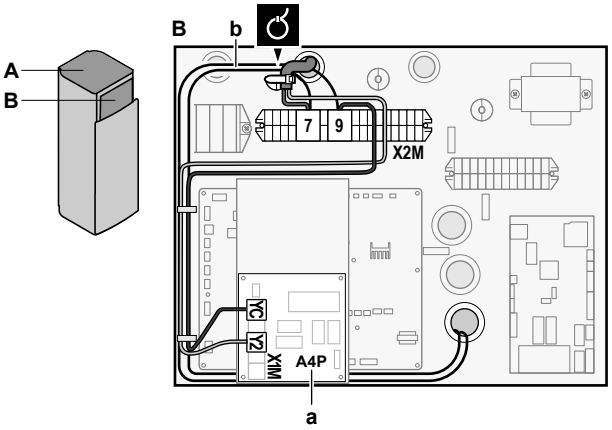

a Installation of EKRP1HBAA is required.
b Prewiring between X2M/7+9 and Q1L (= thermal protector backup heater). Do NOT change.

3 Fix the cable with cable ties to the cable tie mountings.

8.3.9 To connect the changeover to external heat source

	Wires: 2×0.75 mm² Maximum load: 0.3 A, 250 V AC Minimum load: 20 mA, 5 V DC
	[A.2.2.6.1] `Ext. backup heat src`

1 Open the following (see "6.2.4 To open the indoor unit" [▶ 44]):

1	Top panel	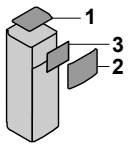
2	Upper front panel	
3	Upper switch box cover	

2 Connect the changeover to external heat source cable to the appropriate terminals as shown in the illustration below.

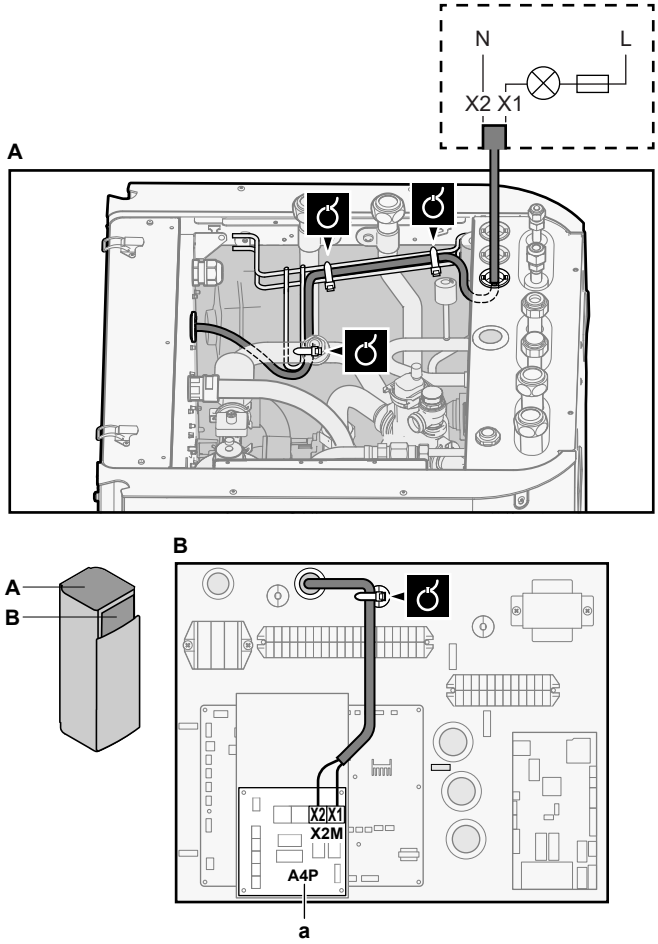

a Installation of EKRP1HBAA is required.

3 Fix the cable with cable ties to the cable tie mountings.

8.3.10 To connect the power consumption digital inputs

	Wires: 2 (per input signal)×0.75 mm² Power limitation digital inputs: 12 V DC / 12 mA detection (voltage supplied by PCB)
	[A.6.3] `Pwr consumpt. control`

1 Open the following (see "6.2.4 To open the indoor unit" [▶ 44]):

1	Top panel	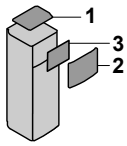
2	Upper front panel	
3	Upper switch box cover	

2 Connect the power consumption digital inputs cable to the appropriate terminals as shown in the illustration below.

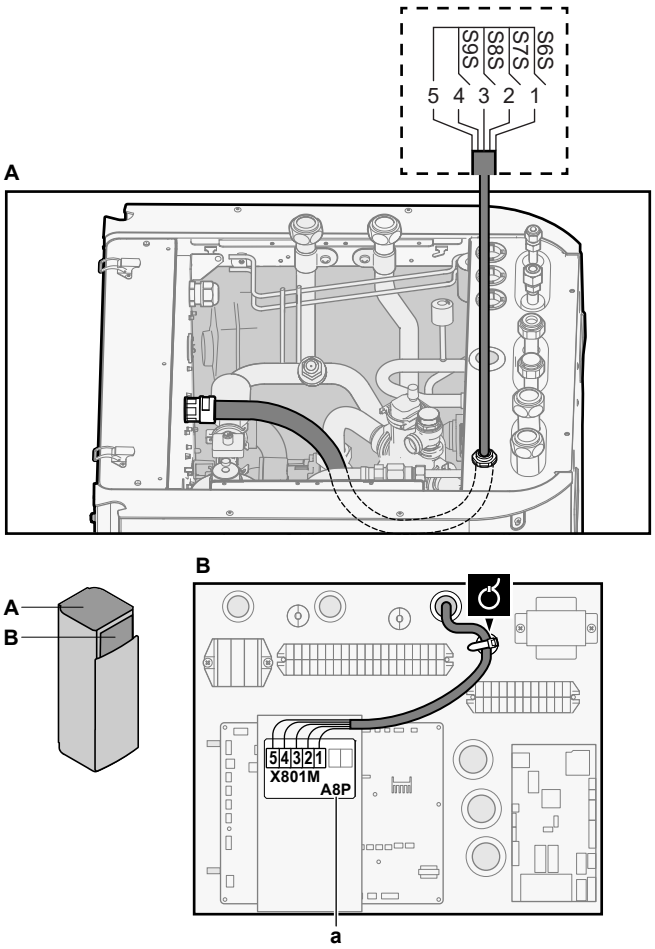

a Installation of EKRP1AHTA is required.

3 Fix the cable with cable ties to the cable tie mountings.

8.3.11 To connect the safety thermostat (normally closed contact)

1 Open the following (see "6.2.4 To open the indoor unit" [▶ 44]):

1	Top panel	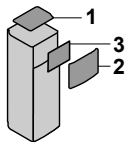
2	Upper front panel	
3	Upper switch box cover	

Main zone

	Wires: 2×0.75 mm²
	—

2 Connect the safety thermostat (normally closed) cable to the appropriate terminals as shown in the illustration below.

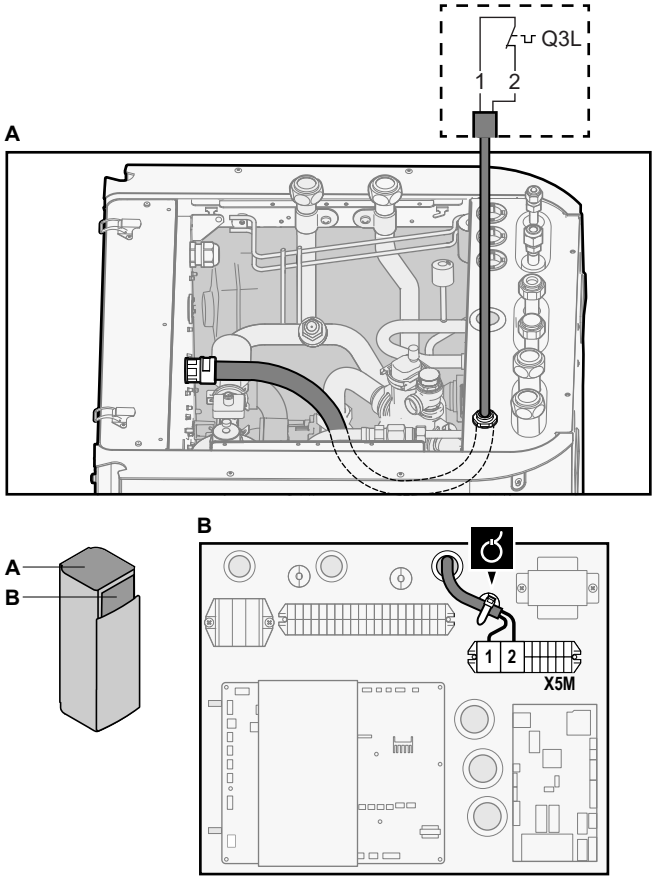

3 Fix the cable with cable ties to the cable tie mountings.

INFORMATION

Installation of a safety thermostat (field supply) is required for the main zone, otherwise the unit will NOT operate.

NOTICE

A safety thermostat MUST be installed on the main zone to avoid too high water temperatures in this zone. The safety thermostat is typically a thermostatically controlled valve with a normally closed contact. When the water temperature in the main zone is too high, the contact will open and the user interface will show a 8H-02 error. ONLY the main pump will stop.

Additional zone

	Wires: 2×0.75 mm² Maximum length: 50 m Safety thermostat contact: 16 V DC detection (voltage supplied by PCB). The voltage-free contact shall ensure the minimum applicable load of 15 V DC, 10 mA.
	[A.2.1.6]=3 (`Forced off contact` = `Thermostat`)

4 Connect the safety thermostat (normally closed) cable to the appropriate terminals as shown in the illustration below.

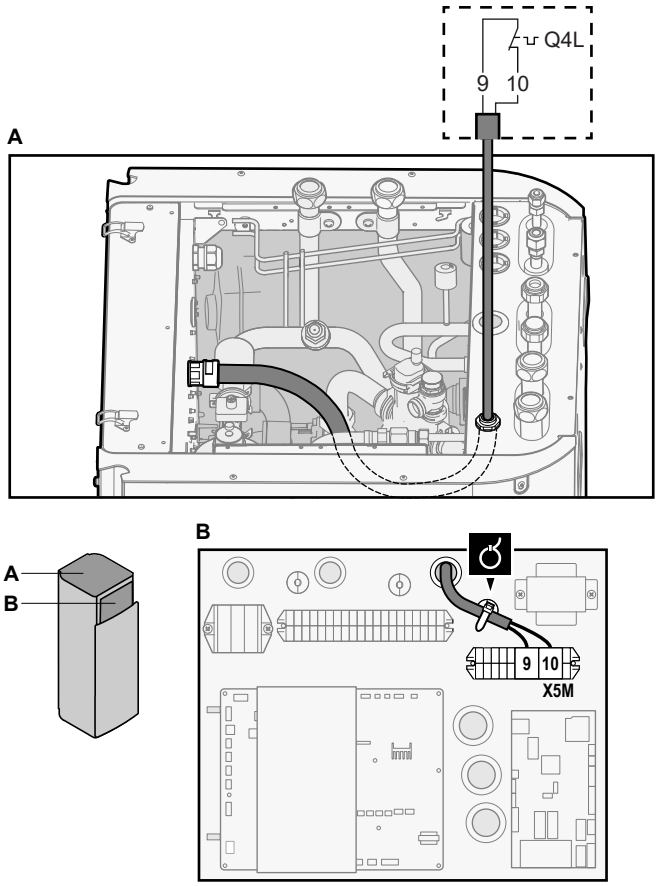

5 Fix the cable with cable ties to the cable tie mountings.

NOTICE

Make sure to select and install the safety thermostat for the additional zone according to the applicable legislation.

In any case, to prevent unnecessary tripping of the safety thermostat, we recommend the following:

- The safety thermostat is automatically resettable.
- The safety thermostat has a maximum temperature variation rate of 2°C/min.
- There is a minimum distance of 2 m between the safety thermostat and the 3-way valve.

INFORMATION

ALWAYS configure the safety thermostat for the additional zone after it is installed. Without configuration, the indoor unit will ignore the safety thermostat contact.

INFORMATION

The preferential kWh rate power supply contact is connected to the same terminals (X5M/9+10) as the safety thermostat for the additional zone. It is only possible for the system to have EITHER preferential kWh rate power supply OR a safety thermostat for the additional zone.

8.4 After connecting the electrical wiring to the indoor unit

To prevent water ingress to the switch box, seal the low voltage wiring intake using the sealing tape (delivered as accessory).

Without low voltage cables	With low voltage cables
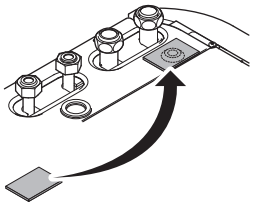	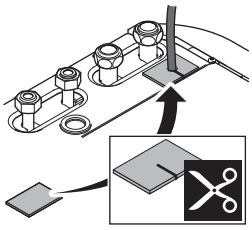

9 Configuration

In this chapter

9.1 Overview: Configuration ... 98
9.1.1 To change the user permission level ... 99
9.1.2 To access the most used commands ... 99
9.1.3 To copy the system settings from the first to the second user interface ... 101
9.1.4 Quick wizard: Set the system layout after first power ON ... 102
9.2 Basic configuration ... 103
9.2.1 Quick wizard: Language / time and date ... 103
9.2.2 Quick wizard: Standard ... 103
9.2.3 Quick wizard: Options ... 106
9.2.4 Space heating/cooling control ... 110
9.2.5 Domestic hot water control ... 113
9.2.6 Contact/helpdesk number ... 113
9.3 Weather-dependent curve ... 114
9.3.1 What is a weather-dependent curve? ... 114
9.3.2 2-points curve ... 114
9.3.3 Using weather-dependent curves ... 115
9.4 Advanced configuration/optimisation ... 116
9.4.1 Space heating/cooling operation: advanced ... 116
9.4.2 Domestic hot water control: advanced ... 123
9.4.3 Heat source settings ... 128
9.4.4 System settings ... 131
9.5 Menu structure: Overview user settings ... 139
9.6 Menu structure: Overview installer settings ... 140

9.1 Overview: Configuration

This chapter describes what you have to do and know to configure the system after it is installed.

Why

If you do NOT configure the system correctly, it might NOT work as expected. The configuration influences the following:

- The calculations of the software
- What you can see on and do with the user interface

How

You can configure the system using two different methods.

Method	Description
Configuring via the user interface	**First time – Quick wizard.** When you turn ON the user interface for the first time (via the indoor unit), a quick wizard starts to help you configure the system. **Afterwards.** If necessary, you can make changes to the configuration afterwards.
Configuring via the PC configurator	You can prepare the configuration off-site on PC and afterwards upload the configuration to the system with the PC configurator.

INFORMATION

When the installer settings are changed, the user interface will request to confirm. When confirmed, the screen will shortly turn OFF and "busy" will be displayed for several seconds.

Accessing settings – Legend for tables

You can access the installer settings using two different methods. However, NOT all settings are accessible via both methods. If so, the corresponding table columns in this chapter are set to N/A (not applicable).

Method	Column in tables
Accessing settings via the breadcrumb in the **menu structure**.	**#** For example: [A.2.1.7]
Accessing settings via the code in the **overview settings**.	**Code** For example: [C-07]

See also:

- "To access the installer settings" [▸ 99]
- "9.6 Menu structure: Overview installer settings" [▸ 140]

9.1.1 To change the user permission level

Default user permission level

The default user permission level is `End user`.

To set the user permission level to End user

1 Press ⓘ for more than 4 seconds.

Result: Your user permission level is now `End user`. The user interface displays the default home page.

To set the user permission level to Advanced end user

1 Go to the main menu or any of its submenus: ☰.

2 Press ⓘ for more than 4 seconds.

Result: Your user permission level is now `Adv. end user`. The user interface displays additional information and a "+" is added to the menu title. The user permission level stays in `Adv. end user` until manually set otherwise.

To set the user permission level to Installer

Prerequisite: Your user permission level is `Adv. end user`.

1 Go to [6.4]: ☰ > `Information` > `User permission level`.

2 Press ☰ for more than 4 seconds.

Result: Your user permission level is now `Installer`. The home pages display 🔧.

> **INFORMATION**
>
> The `Installer` permission level switches automatically back to `End user` in the following cases:
>
> - If you press ⓘ again for more than 4 seconds, or
> - If you do NOT press any button for more than 1 hour

9.1.2 To access the most used commands

To access the installer settings

1 Set the user permission level to `Installer`.

2 Go to [A]: ☰ > `Installer settings`.

To access the overview settings

1 Set the user permission level to `Installer`.

2 Go to [A.8]: ☰ > `Installer settings` > `Overview settings`.

To modify an overview setting

Example: Modify [1-01] from 15 to 20.

1 Go to [A.8]: ☰ > `Installer settings` > `Overview settings`.

2 Go to the corresponding screen of the first part of the setting (in this example [**1**-01]) by using the ▲ and ▼ button.

> **INFORMATION**
>
> An additional 0-digit is added to the first part of the setting when you access the codes in the overview settings.
>
> **Example:** [1-01]: "1" will result in "**0**1".

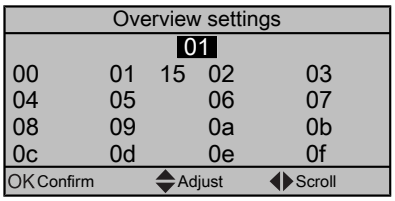

3 Go to the corresponding second part of the setting (in this example [1-**01**]) by using the ◀ and ▶ button.

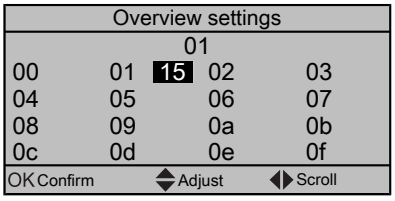

Result: The value to be modified is now highlighted.

4 Modify the value by using the ▲ and ▼ button.

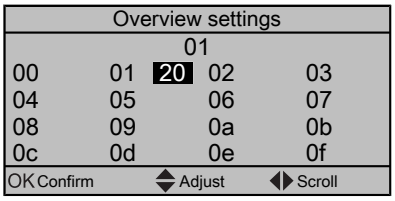

5 Repeat previous steps if you have to modify other settings.

6 Push OK to confirm the modification of the parameter.

7 At installer settings menu, press OK to confirm the settings.

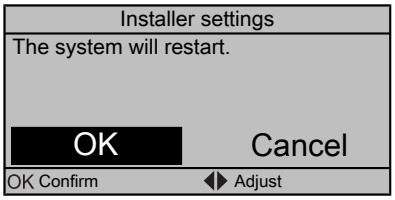

Result: The system will restart.

9.1.3 To copy the system settings from the first to the second user interface

If a second user interface is connected, the installer must first proceed below instructions for the proper configuration of the 2 user interfaces.

1 Turn on the unit.

Result: When turned on for the first time, both user interfaces display:

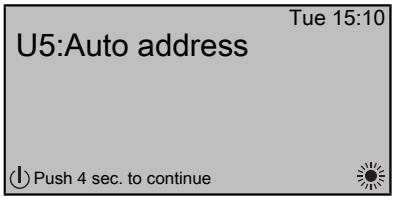

2 Push ⏻ for 4 seconds on the user interface on which you want to proceed to the quick wizard.

Result: This user interface is now the main user interface.

> **INFORMATION**
>
> While using the quick wizard on the main user interface, the second user interface displays `Busy` and you cannot interact with it.

3 On the display, check if there is a data difference between both user interfaces.

Result: For proper operation of the system, the local data on both user interfaces must be the same. If they contain different data, both user interfaces will display:

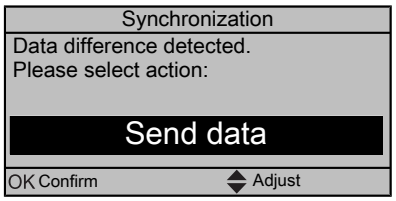

4 To make the data equal on both user interfaces, select the required action:

- `Send data`: the user interface you are operating contains the correct data. Copy this data to the other user interface.
- `Receive data`: the user interface you are operating does NOT contain the correct data. Copy the data of the other user interface to this user interface.

5 Confirm to proceed.

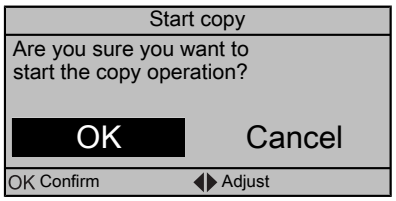

6 Push OK to confirm the displayed selection of data.

Result: All data (languages, schedules etc.) will be copied from the selected source user interface to the other one. When done, the system is ready to be operated via both user interfaces.

INFORMATION

- As long as data is being copied, you cannot operate the user interfaces.
- Copying data can take up to 90 minutes.
- It is recommended to change installer settings, or the configuration of the unit, on the main user interface. If not, it can take up to 5 minutes before these changes are visible in the menu structure of the main user interface.

9.1.4 Quick wizard: Set the system layout after first power ON

After first power ON of the system, a quick wizard guides you through the initial configuration of the following system settings:

- language
- date
- time
- system layout

After you confirmed the system layout, you can proceed with the installation and commissioning of the system.

1. At power ON and as long as the system layout was not confirmed yet, select your preferred language.

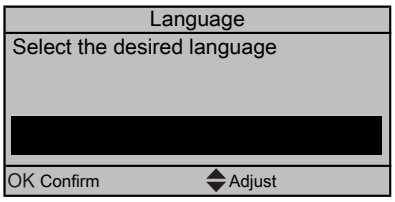

2. Set the current date and time.

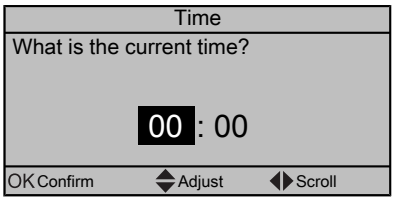

3. Set the system layout settings: `Standard`, `Options`, `Capacities`. For more details, see "9.2 Basic configuration" [▸ 103].

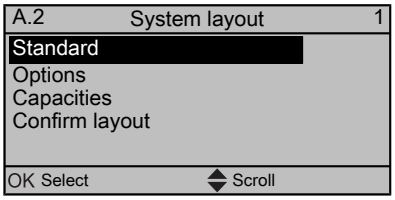

4. After configuration, select `Confirm layout` and press OK.

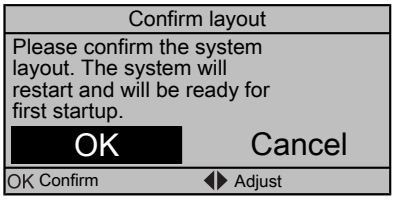

Result: The user interface reinitializes.

5 Proceed with the configuration of the system. When done, confirm the configuration settings.

Result: The screen shortly turns OFF and `Busy` is displayed for several seconds.

9.2 Basic configuration

9.2.1 Quick wizard: Language / time and date

#	Code	Description
[A.1]	N/A	Language
[1]	N/A	Time and date

9.2.2 Quick wizard: Standard

Space heating settings

The system can heat up a space. Depending on the type of application, the space heating settings must be made accordingly.

Space heating: Unit control method

#	Code	Description
[A.2.1.7]	[C-07]	`Unit control method` ▪ 0 (`LWT control`) ▪ 1 (`Ext RT control`) ▪ 2 (`RT control`)

`LWT control`:

Unit operation is decided based on the leaving water temperature regardless the actual room temperature and/or heating demand of the room.

`Ext RT control`:

Unit operation is decided by the external thermostat or equivalent (e.g. heat pump convector).

`RT control`:

Unit operation is decided based on the ambient temperature of the user interface.

Space heating: User interface location

#	Code	Description
[A.2.1.B]	N/A	`User interface location` ▪ 0 (`At unit`) ▪ 1 (`In room`)

Only applicable if there are 2 user interfaces (1 installed in the room, 1 installed at the indoor unit).

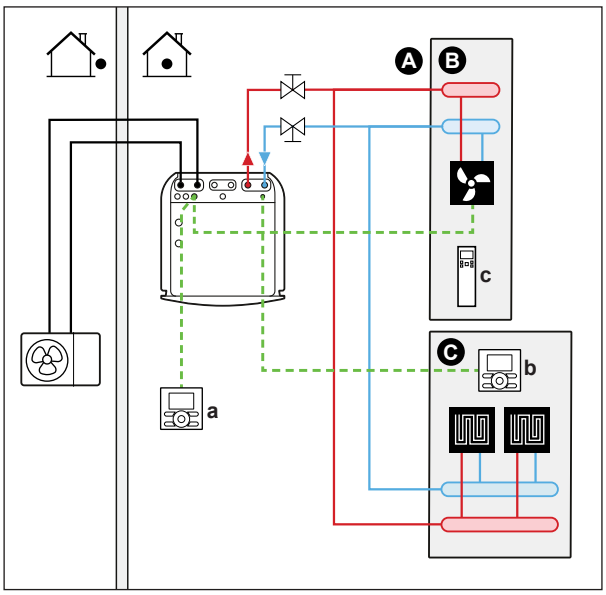

A Additional zone leaving water temperature zone
B Room 1
C Room 2
a User interface is located at the unit
b User interface is located in the room
c Remote controller of the heat pump convector

`At unit`:

The other user interface:

- is automatically set to `In room`,
- acts as room thermostat if `RT control` is selected.

`In room`:

This user interface acts as room thermostat if `RT control` is selected.

The other user interface is set to `At unit`.

Space heating: Number of LWT zones

#	Code	Description
N/A	[7-02]	`Number of LWT zones` ▪ 0 (`1 LWT zone`) ▪ 1 (`2 LWT zones`)

The system can supply leaving water to up to 2 water temperature zones. During configuration, the number of water zones must be set.

`1 LWT zone`:

There is only 1 leaving water temperature zone. This zone is called the main leaving water temperature zone.

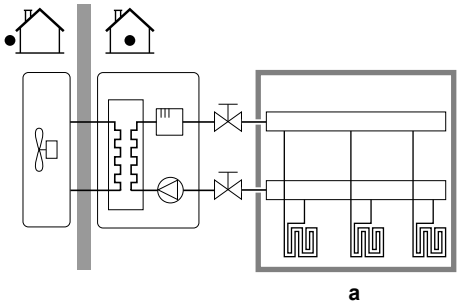

a Main LWT zone

`2 LWT zones`:

There are 2 leaving water temperature zones:

- The zone with the lowest leaving water temperature (in heating) is called the main leaving water temperature zone.
- The zone with the highest leaving water temperature (in heating) is called the additional leaving water temperature zone.

Remark: In practice, the main leaving water temperature zone consists of the higher load heat emitters and a mixing station is installed to achieve the desired leaving water temperature.

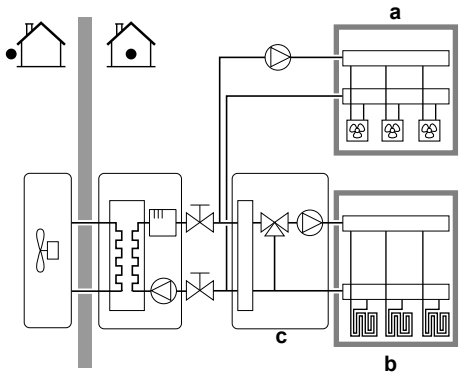

a Additional LWT zone
b Main LWT zone
c Mixing station

Space heating: Pump operation mode

#	Code	Description
[A.2.1.9]	[F-0D]	`Pump operation mode` ▪ 0 (`Continuous`) ▪ 1 (`Sample`) ▪ 2 (`Request`)

When the space heating control is OFF by the user interface, the pump is always OFF. When the space heating control is ON, you can select the desired pump operation mode (only applicable during space heating).

`Continuous`:

Continuous pump operation, regardless of thermo ON or OFF condition.

Remark: Continuous pump operation requires more energy than sample or request pump operation.

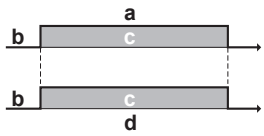

a Space heating control (user interface)
b OFF
c ON
d Pump operation

`Sample`:

The pump is ON when there is a heating demand as the leaving water temperature has not reached the desired temperature yet. When thermo OFF condition occurs, the pump runs every 5 minutes to check the water temperature and demand heating if necessary.

Remark: Sample is NOT available in external room thermostat control or room thermostat control.

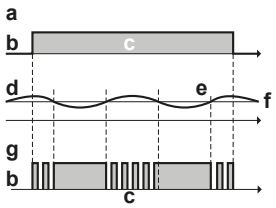

a Space heating control (user interface)
b OFF
c ON
d LWT temperature
e Actual
f Desired
g Pump operation

`Request`:

Pump operation based on request.

Example: Using a room thermostat creates a thermo ON/OFF condition. When there is no demand, the pump is OFF.

Remark: Request is NOT available in leaving water temperature control.

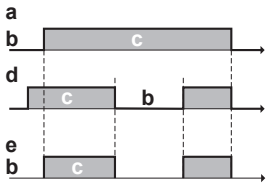

a Space heating control (user interface)
b OFF
c ON
d Heating demand (by ext. RT or RT)
e Pump operation

NOTICE

Water pipe freeze prevention. Even if you turn OFF the leaving water temperature (main + additional) control via the home pages (`LWT main` + `LWT add`), water pipe freeze prevention –if enabled– will remain active.

9.2.3 Quick wizard: Options

DHW pump

#	Code	Description
[A.2.2.A]	[D-02]	`DHW pump`: ▪ 0 (`No`) NOT installed. ▪ 1 (`Secondary rtrn`): Installed for instant hot water when water is tapped. The end-user sets the operation timing (weekly schedule time) of the domestic hot water pump when it should run. Control of this pump is possible through the outdoor unit. ▪ 2 (`Disinf. shunt`): Installed for disinfection. It runs when the disinfection function of the domestic hot water tank is running. No further settings are needed. See also illustrations below.

See also:

- "5.3.4 DHW pump for instant hot water" [▶ 29]

- "5.3.5 DHW pump for disinfection" [▶ 29]

> **NOTICE**
>
> If an external room thermostat is used, the external room thermostat will control the room frost protection. However, the room frost protection is only possible if the leaving water temperature control on user interface of the unit is turned ON.

See "5 Application guidelines" [▶ 24].

Only applicable in external room thermostat control.

Following combinations are possible to control the unit (not applicable when [C-07]=0):

- [C-07]=2 (`RT control`)

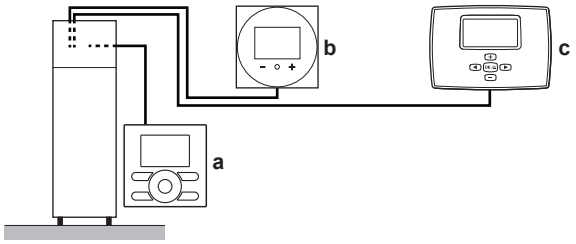

a User interface of the indoor unit
B User interface used as room thermostat at main zone
c External room thermostat at additional zone

- [C-07]=1 (`Ext RT control`)

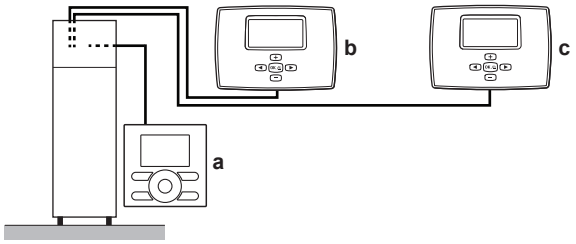

a User interface of the indoor unit
b External room thermostat at main zone
c External room thermostat at additional zone

#	Code	Description
[A.2.2.4]	[C-05]	`Contact type main` In external room thermostat control, the contact type of the optional room thermostat or heat pump convector for the main leaving water temperature zone must be set. See "5 Application guidelines" [▸ 24]. ▪ 1 (`Thermo ON/OFF`): The connected external room thermostat or heat pump convector sends the heating demand by the same signal as it is connected to only 1 digital input (preserved for the main leaving water temperature zone) on the indoor unit (X2M/1). Select this value in case of a connection to the heat pump convector (FWXV). ▪ 2 (`H/C request`)(default): The connected external room thermostat sends separate heating demand and is therefore connected to the 2 digital input (preserved for the main leaving water temperature zone) on the indoor unit (X2M/1 and 2). Select this value in case of connection with the wired (EKRTWA) or wireless (EKRTR1) room thermostat.
N/A	[C-06]	`Contact type add.` In external room thermostat control with 2 leaving water temperature zones, the type of the optional room thermostat for the additional leaving water temperature zone must be set. See "5 Application guidelines" [▸ 24]. ▪ 1 (`Thermo ON/OFF`): See `Contact type main`. Connected on the indoor unit (X2M/1a). ▪ 2 (`H/C request`)(default): See `Contact type main`. Connected on the indoor unit (X2M/1a and 2a).
[A.2.2.B]	[C-08]	`External sensor` When an optional external ambient sensor is connected, the type of the sensor must be set. ▪ 0 (`No`: NOT installed. The thermistor in the user interface and in the outdoor unit are used for measurement. ▪ 1 (`Outdoor sensor`): Connected to PCB of the indoor unit measuring the **outdoor temperature**. **Remark:** : For some functionality, the temperature sensor in the outdoor unit is still used. ▪ 2 (`Room sensor`): Connected to PCB of the indoor unit measuring the **indoor temperature**. The temperature sensor in the user interface is NOT used anymore. **Remark:** ; This value only has meaning in room thermostat control.

Digital I/O PCB

#	Code	Description
N/A	[C-02]	`Ext. backup heat src` Indicates if the space heating is also performed by means of another heat source than the system. ▪ 0 (**No**)(default): NOT installed. ▪ 1 (`Bivalent`): Installed. The auxiliary boiler (gasboiler, oil burner) will operate when the outdoor ambient temperature is low. During the bivalent operation, the heat pump is turned OFF. Set this value in case an auxililary boiler is used. See "5 Application guidelines" [▸ 24].
N/A	[C-09]	`Alarm output` Indicates the logic of the alarm output on the digital I/O PCB during malfunctioning. ▪ 0 (`Normally open`): The alarm output will be powered when an alarm occurs. By setting this value, a distinction is made between the detection of an alarm, and the detection of a power failure. ▪ 1 (`Normally closed`): The alarm output will NOT be powered when an alarm occurs.

Alarm output logic

[C-09]	Alarm	No alarm	No power supply to unit
0 (default)	Closed output	Open output	Open output

Demand PCB

The demand PCB is used to enable the power consumption control by digital inputs. See "5 Application guidelines" [▸ 24].

#	Code	Description
N/A	[D-04]	`Demand PCB` Indicates if the optional demand PCB is installed. ▪ 0 (**No**) ▪ 1 (`Pwr consmp ctrl`)

Energy metering

When energy metering is performed by the use of external power meters, configure the settings as described below. Select the pulse frequency output of each power meter in accordance with the power meter specifications. It is possible to connect (up to 2) power meters with different pulse frequencies. When only 1 or no power meter is used, select **No** to indicate the corresponding pulse input is NOT used.

#	Code	Description
N/A	[D-08]	Optional external kWh meter 1: ▪ 0 (`No`): NOT installed ▪ 1: Installed (0.1 `pulse/kWh`) ▪ 2: Installed (1 `pulse/kWh`) ▪ 3: Installed (10 `pulse/kWh`) ▪ 4: Installed (100 `pulse/kWh`) ▪ 5: Installed (1000 `pulse/kWh`)
N/A	[D-09]	Optional external kWh meter 2: ▪ 0 (`No`): NOT installed ▪ 1: Installed (0.1 `pulse/kWh`) ▪ 2: Installed (1 `pulse/kWh`) ▪ 3: Installed (10 `pulse/kWh`) ▪ 4: Installed (100 `pulse/kWh`) ▪ 5: Installed (1000 `pulse/kWh`)

9.2.4 Space heating/cooling control

Leaving water temperature: Main zone

#	Code	Description
[A.3.1.1.1]	N/A	Select the setpoint mode of the leaving water temperature. `LWT setpoint mode`: ▪ 0 (`Fixed`): Absolute ▪ 1 (`Weather dep.`): Weather-dependent ▪ 2 (`Fixed/scheduled`): Absolute + scheduled (only if `Unit control method`=`LWT control`) ▪ 3 (`WD/scheduled`): Weather-dependent + scheduled (only if `Unit control method`=`LWT control`)
[7.7.1.1]	[1-00] [1-01] [1-02] [1-03]	If you selected weather-dependent curve as a setpoint mode, adjust the curve to your needs. [a] `Set weather-dependent heating`: 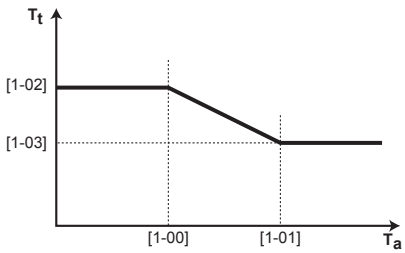 ▪ T_t: Target leaving water temperature (main) ▪ T_a: Outdoor temperature

[a] Also see "9.3 Weather-dependent curve" [▸ 114].

Leaving water temperature: Additional zone

#	Code	Description
[A.3.1.2.1]	N/A	Select the setpoint mode of the leaving water temperature. `LWT setpoint mode`: ▪ 0 (`Fixed`): Absolute ▪ 1 (`Weather dep.`): Weather-dependent ▪ 2 (`Fixed/scheduled`): Absolute + scheduled (only if `Unit control method`=`LWT control`) ▪ 3 (`WD/scheduled`): Weather-dependent + scheduled (only if `Unit control method`=`LWT control`)
[7.7.2.1]	[0-00] [0-01] [0-02] [0-03]	If you selected weather-dependent curve as a setpoint mode, adjust the curve to your needs. [a] `Set weather-dependent heating`: 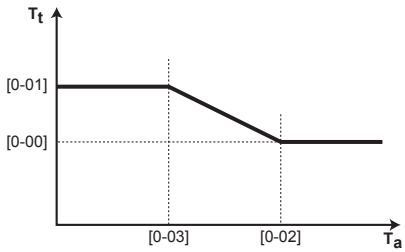 ▪ T_t: Target leaving water temperature (additional) ▪ T_a: Outdoor temperature

[a] Also see "9.3 Weather-dependent curve" [▶ 114].

Leaving water temperature: Delta T source

The Delta T is the required temperature difference between entering and leaving water. This applies to both temperature zones. Change the value of Delta T if another minimum temperature difference is required for the good operation of the heat emitters in heating mode.

#	Code	Description
[A.3.1.3.1]	[1-0B]	Delta T for heating Range: 3°C~10°C

Leaving water temperature: Modulation

To allow better matching of the heat pump capacity with the actual required capacity, enable the leaving water temperature modulation. If modulation is enabled, the unit calculates the leaving water temperature according to the difference between desired and actual room temperature. As a result, the heat pump will have less start/stop cycles and thus operate more economical.

If modulation is enabled, you can also set the maximum modulation of the leaving water temperature. The maximum modulation is the value by which the desired leaving water temperature is increased or lowered.

#	Code	Description
[A.3.1.1.5]	[8-05]	`Modulated LWT`: ▪ 0 (`No`): Disabled ▪ 1 (`Yes`): Enabled
N/A	[8-06]	Maximum modulation: Range: 0°C~10°C

INFORMATION

When leaving water temperature modulation is enabled, the weather-dependent curve needs to be set to a higher position than [8-06] plus the minimum leaving water temperature setpoint required to reach a stable condition on the comfort setpoint for the room. To increase efficiency, modulation can lower the leaving water setpoint. By setting the weather-dependent curve to a higher position, it cannot drop below the minimum setpoint. See the illustration below.

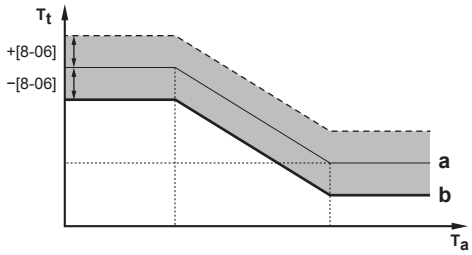

a Weather-dependent curve
b Minimum leaving water temperature setpoint required to reach a stable condition on the comfort setpoint for the room.
T_t Target leaving water temperature
T_a Outdoor temperature

Leaving water temperature: Emitter type

Heating up the main zone can take longer. This depends on:

- The water volume of the system
- The heater emitter type of the main zone

The setting `Emitter type` can compensate for a slow or a quick heating system during the heat up cycle. In room thermostat control, the emitter type influences the maximum modulation of the desired leaving water temperature, and the possibility for usage of the automatic heating changeover based on the indoor ambient temperature.

It is important to set the emitter type correctly and in accordance with your system layout. The target delta T for the main zone depends on it.

#	Code	Description
[A.3.1.1.7]	[2-0C]	`Emitter type` ▪ 0: `Underfloor heat` ▪ 1: `Fancoil unit` ▪ 2: `Radiator`

9.2.5 Domestic hot water control

#	Code	Description
[A.4.1]	[6-0D]	Domestic hot water `Type`: ▪ 0 (`Reheat only`): Only reheat operation is allowed. ▪ 1 (`Reheat + sched.`): Same as 2, but between the scheduled heatup cycles, reheat operation is allowed. ▪ 2 (`Scheduled only`): The domestic hot water tank can ONLY be heated according to a schedule.
[A.4.5]	[6-0E]	The maximum temperature that users can select for the domestic hot water. You can use this setting to limit the temperature at the hot water taps.

INFORMATION

There is a risk of a space heating capacity shortage/comfort problem when selecting [6-0D]=0 ([A.4.1] Domestic hot water `Type`=`Reheat only`).

In case of frequent domestic hot water operation, frequent and long space heating interruption will happen.

Maximum DHW temperature setpoint

The maximum temperature that users can select for the domestic hot water. You can use this setting to limit the temperatures at the hot water taps.

INFORMATION

During disinfection of the domestic hot water tank, the DHW temperature can exceed this maximum temperature.

INFORMATION

Limit the maximum hot water temperature according to the applicable legislation.

#	Code	Description
[A.4.5]	[6-0E]	`Maximum setpoint` The maximum temperature that users can select for the domestic hot water. You can use this setting to limit the temperature at the hot water taps. The maximum temperature is NOT applicable during disinfection function. See disinfection function.

9.2.6 Contact/helpdesk number

#	Code	Description
[6.3.2]	N/A	Number that users can call in case of problems.

9.3 Weather-dependent curve

9.3.1 What is a weather-dependent curve?

Weather-dependent operation

The unit operates 'weather dependent' if the desired leaving water or tank temperature is determined automatically by the outdoor temperature. It therefore is connected to a temperature sensor on the North wall of the building. If the outdoor temperature drops or rises, the unit compensates instantly. Thus, the unit does not have to wait for feedback by the thermostat to increase or decrease the temperature of the leaving water or tank. Because it reacts more quickly, it prevents high rises and drops of the indoor temperature and water temperature at tap points.

Advantage

Weather-dependent operation reduces energy consumption.

Weather-dependent curve

To be able to compensate for differences in temperature, the unit relies on its weather-dependent curve. This curve defines how much the temperature of the tank or leaving water must be at different outdoor temperatures. Because the slope of the curve depends on local circumstances such as climate and the insulation of the house, the curve can be adjusted by an installer or user.

Availability

The weather-dependent curve is available for:

- Main zone - Heating
- Additional zone - Heating
- Tank

INFORMATION

To operate weather dependent, correctly configure the setpoint of the main zone, additional zone or tank. See "9.3.3 Using weather-dependent curves" [▸ 115].

9.3.2 2-points curve

Define the weather-dependent curve with these two setpoints:

- Setpoint (X1, Y2)
- Setpoint (X2, Y1)

Example

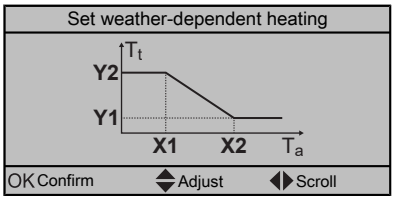

X1, X2 Examples of outdoor ambient temperature
Y1, Y2 Examples of desired tank temperature or leaving water temperature

9.3.3 Using weather-dependent curves

Configure weather-dependent curves as following:

To define the setpoint mode

To use the weather-dependent curve, you need to define the correct setpoint mode:

Go to setpoint mode ...	Set the setpoint mode to ...
Main zone – Heating	
[A.3.1.1.1] `Main` > `LWT setpoint mode`	`Weather dep.` OR `WD/scheduled`
Additional zone – Heating	
[A.3.1.2.1] `Additional` > `LWT setpoint mode`	`Weather dep.` OR `WD/scheduled`
Tank	
[A.4.6] `Domestic hot water (DHW)` > `SP mode`	`Weather dep.`

To change the weather-dependent curve

Zone	Go to ...
Main zone – Heating	[7.7.1.1]`Main` > `Set weather-dependent heating`
Additional zone – Heating	[7.7.2.1]`Additional` > `Set weather-dependent heating`
Tank	[A.4.7] `Domestic hot water (DHW)` > `Weather-dependent curve`

INFORMATION

Maximum and minimum setpoints

You cannot configure the curve with temperatures that are higher or lower than the set maximum and minimum setpoints for that zone or for the tank. When the maximum or minimum setpoint is reached, the curve flattens out.

To fine-tune the weather-dependent curve

The following table describes how to fine-tune the weather-dependent curve of a zone or tank:

You feel ...		Fine-tune with setpoints:			
At regular outdoor temperatures ...	At cold outdoor temperatures ...	Y2[a]	Y1[a]	X1[a]	X2[a]
OK	Cold	↑	—	↑	—
OK	Hot	↓	—	↓	—
Cold	OK	—	↑	—	↑
Cold	Cold	↑	↑	↑	↑
Cold	Hot	↓	↑	↓	↑
Hot	OK	—	↓	—	↓
Hot	Cold	↑	↓	↑	↓

You feel ...		Fine-tune with setpoints:			
At regular outdoor temperatures ...	At cold outdoor temperatures ...	Y2[a]	Y1[a]	X1[a]	X2[a]
Hot	Hot	↓	↓	↓	↓

[a] See "9.3.2 2-points curve" [▸ 114].

9.4 Advanced configuration/optimisation

9.4.1 Space heating/cooling operation: advanced

Preset leaving water temperature

You can define preset leaving water temperatures:

- economic (denotes the desired leaving water temperature which results in the lowest energy consumption)
- comfort (denotes the desired leaving water temperature which results in the highest energy consumption).

Preset values make it easy to use the same value in the schedule or to adjust the desired leaving water temperature according to the room temperature (see modulation). If you later want to change the value, you ONLY have to do it in one place. Depending on whether the desired leaving water temperature is weather dependent or NOT, the desired shift values or the absolute desired leaving water temperature should be specified.

NOTICE

The preset leaving water temperatures are ONLY applicable for the main zone, as the schedule for the additional zone consists of On/OFF actions.

NOTICE

Select preset leaving water temperatures in accordance with the design and selected heat emitters to ensure the balance between desired room and leaving water temperatures.

#	Code	Description
Preset leaving water temperature for the main leaving water temperature zone in case of NOT weather dependent		
[7.4.2.1]	[8-09]	`Comfort (heating)` [9-01]°C~[9-00]°C
[7.4.2.2]	[8-0A]	`Eco (heating)` [9-01]°C~[9-00]°C

Temperature ranges (leaving water temperatures)

The purpose of this setting is to prevent selecting a wrong (i.e. too hot or too cold) leaving water temperature. Therefore the available desired heating temperature range and desired cooling temperature range can be configured.

NOTICE

In case of a floor heating application it is important to limit the maximum leaving water temperature at heating operation according to the specifications of the floor heating installation.

NOTICE

- When adjusting the leaving water temperature ranges, all desired leaving water temperatures are also adjusted to guarantee they are between the limits.
- Always balance between the desired leaving water temperature with the desired room temperature and/or the capacity (according to the design and selection of the heat emitters). The desired leaving water temperature is the result of several settings (preset values, shift values, weather-dependent curves, modulation). As a result, too high or too low leaving water temperatures could occur which lead to overtemperatures or capacity shortage. By limiting the leaving water temperature range to adequate values (depending on the heat emitter), such situations can be avoided.

Example: Set the minimum leaving water temperature to 28°C to avoid NOT to be able to heat up the room: leaving water temperatures MUST be sufficiently higher than the room temperatures (in heating).

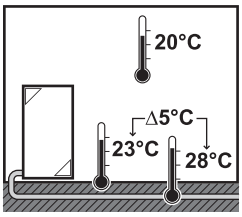

#	Code	Description
Leaving water temperature range for the main leaving water temperature zone (= the leaving water temperature zone with the lowest leaving water temperature in heating operation and the highest leaving water temperature in cooling operation)		
[A.3.1.1.2.2]	[9-00]	`Maximum temp (heating)` 37°C~60°C
[A.3.1.1.2.1]	[9-01]	`Minimum temp (heating)` 15°C~37°C
Leaving water temperature range for the additional leaving water temperature zone (= the leaving water temperature zone with the highest leaving water temperature in heating operation and the lowest leaving water temperature in cooling operation)		
[A.3.1.2.2.2]	[9-06]	`Maximum temp (heating)` 37°C~60°C
[A.3.1.2.2.1]	[9-05]	`Minimum temp (heating)` 15°C~37°C

Leaving water temperature overshoot temperature

This function defines how much the water temperature may rise above the desired leaving water temperature before the compressor stops. The compressor will startup again when the leaving water temperature drops below the desired leaving water temperature.

#	Code	Description
N/A	[9-04]	1°C~4°C

INFORMATION

This overshoot temperature applies to the heat pump leaving water temperature. Note that when the gas boiler is operating, there can be a 5°C overshoot over the desired boiler leaving water temperature.

Leaving water temperature compensation around 0°C

In heating operation, the desired leaving water temperature is locally increased around an outdoor temperature of 0°C. This compensation can be selected when using an absolute or a weather-dependent desired temperature (see illustration below). Use this setting to compensate for possible heat losses of the building due to the evaporation of melted ice or snow (e.g. in cold region countries).

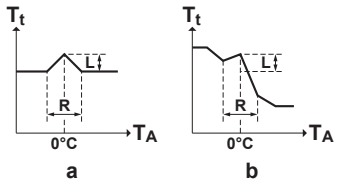

a Absolute desired LWT
b Weather-dependent desired LWT

#	Code	Description
N/A	[D-03]	▪ 0 (disabled) ▪ 1 (enabled) L=2°C, R=4°C (−2°C<T_A<2°C) ▪ 2 (enabled) L=4°C, R=4°C (−2°C<T_A<2°C) ▪ 3 (enabled) L=2°C, R=8°C (−4°C<T_A<4°C) ▪ 4 (enabled) L=4°C, R=8°C (−4°C<T_A<4°C)

Leaving water temperature maximum modulation

ONLY applicable in room thermostat control and when modulation is enabled. The maximum modulation (=variance) on the desired leaving water temperature decided on the difference between the actual and desired room temperature, e.g. 3°C modulation means the desired leaving water temperature can be increased or lowered by 3°C. Increasing the modulation results in better performance (less On/OFF, faster heat up), but note that depending on the heat emitter, there MUST ALWAYS be a balance (see the design and selection of the heat emitters) between the desired leaving water temperature and the desired room temperature.

#	Code	Description
N/A	[8-06]	0°C~10°C

Temperature ranges (room temperature)

ONLY applicable in room thermostat control. In order to save energy by preventing overheating or undercooling the room, you can limit the range of the room temperature.

NOTICE

When adjusting the room temperature ranges, all desired room temperatures are also adjusted to guarantee they are between the limits.

#	Code	Description
`Room temp. range`		
[A.3.2.1.2]	[3-06]	`Maximum temp (heating)` 18°C~30°C
[A.3.2.1.1]	[3-07]	`Minimum temp (heating)` 12°C~30°C

Room temperature step

ONLY applicable in room thermostat control and when the temperature is displayed in °C.

#	Code	Description
[A.3.2.4]	N/A	`Room temp. step` ▪ 1°C. The desired room temperature on the user interface is settable per 1°C. ▪ 0.5°C. The desired room temperature on the user interface is settable per 0.5°C. The actual room temperature is displayed with an accuracy of 0.1°C.

Room temperature hysteresis

ONLY applicable in case of room thermostat control. The hysteresis band around the desired room temperature is settable. It is recommended NOT to change the room temperature hysteresis as it is set for an optimal use of the system.

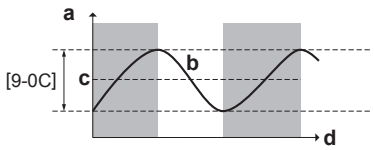

a Room temperature
b Actual room temperature
c Desired room temperature
d Time

#	Code	Description
N/A	[9-0C]	1°C~6°C

Room temperature offset

ONLY applicable in case of room thermostat control. You can calibrate the room temperature sensor. It is possible to give an offset to the room thermistor value measured by the user interface. The settings can be used to compensate for situations where the user interface cannot be installed on the ideal installation location.

#	Code	Description
`Room temp. offset`: Offset on the actual room temperature measured on the user interface sensor.		
[A.3.2.2]	[2-0A]	–5°C~5°C, step 0.5°C

Room frost protection

Room frost protection prevents the room from getting too cold. This setting behaves differently depending on the set unit control method ([C-07]). Perform actions according to the table below:

Unit control method ([C-07])	Room frost protection
Room thermostat control ([C-07]=2)	Allow for the room thermostat to take care of room frost protection: ▪ Set [2-06] to "1" ▪ Set the room antifrost temperature ([2-05]).
External room thermostat control ([C-07]=1)	Allow for the external room thermostat to take care of room frost protection: ▪ Turn ON the leaving water temperature home page.
Leaving water temperature control ([C-07]=0)	Room frost protection is NOT guaranteed.

NOTICE

Room frost protection. Even if you turn OFF the leaving water temperature (main + additional) control via the home pages (`LWT main` + `LWT add`), room frost protection –if enabled– will remain active.

INFORMATION

If a U4 error occurs, room frost protection is NOT guaranteed.

See the sections below for detailed information on room frost protection in relation to the applicable unit control method.

[C-07]=2: room thermostat control

Under room thermostat control, room frost protection is guaranteed, even if the room temperature home page is OFF on the user interface. When room frost protection ([2-06]) is enabled and the room temperature drops below the room antifrost temperature ([2-05]), the unit will supply leaving water to the heat emitters to heat up the room again.

#	Code	Description
N/A	[2-06]	`Room frost protection` ▪ 0: disabled ▪ 1: enabled
N/A	[2-05]	Room antifrost temperature 4°C~16°C

INFORMATION

If a U5 error occurs, room frost protection is NOT guaranteed,

NOTICE

If `Emergency` is set to `Manual` ([A.6.C]=0), and the unit is triggered to start emergency operation, the user interface will ask confirmation before starting. Room frost protection is active even if the user does NOT confirm emergency operation.

[C-07]=1: external room thermostat control

Under external room thermostat control, room frost protection is guaranteed by the external room thermostat, provided that the leaving water temperature home page is ON on the user interface, and the auto emergency setting ([A.6.C]) is set to "1".

Additionally, limited frost protection by the unit is possible:

In case of...	...then the following applies:
One leaving water temperature zone	▪ When the leaving water temperature home page is OFF and the outdoor ambient temperature drops below 4°C, then the unit will supply leaving water to the heat emitters to heat up the room again, and the leaving water temperature setpoint will be lowered. ▪ When the leaving water temperature home page is ON, the external room thermostat is "Thermo OFF" and the outdoor ambient temperature drops below 4°C, then the unit will supply leaving water to the heat emitters to heat up the room again and the leaving water temperature setpoint will be lowered. ▪ When the leaving water temperature home page is ON and the external room thermostat is "Thermo ON", then room frost protection is guaranteed by the normal logic.

In case of...	...then the following applies:
Two leaving water temperature zones	▪ When the leaving water temperature home page is OFF, and the outdoor ambient temperature drops below 4°C, then the unit will supply leaving water to the heat emitters to heat up the room again, and the leaving water temperature setpoint will be lowered. ▪ When the leaving water temperature home page is ON, the operation mode is "heating", and the outdoor ambient temperature drops below 4°C, then the unit will supply leaving water to the heat emitters to heat up the room again, and the leaving water temperature setpoint will be lowered. ▪ The selection of "cooling" or "heating" is done via the user interface. When the leaving water temperature home page is ON and the operation mode is "cooling", then there is no protection.

[C-07]=0: leaving water temperature control

Under leaving water temperature control, room frost protection is NOT guaranteed. However, if [2-06] is set to "1", limited frost protection by the unit is possible:

- When the leaving water temperature home page is OFF and the outdoor ambient temperature drops below 4°C, then the unit will supply leaving water to the heat emitters to heat up the room again, and the leaving water temperature setpoint will be lowered.
- When the leaving water temperature home page is ON, then the unit will supply leaving water to the heat emitters to heat up the room according to normal logic.

Shut-off valve

The following is only applicable in case of 2 leaving water temperature zones. In case of 1 leaving water temperature zone, connect the shut-off valve to the heating/cooling output.

The shut-off valve, which is in the main leaving water temperature zone, output is configurable.

INFORMATION

During defrost operation, the shut-off valve is ALWAYS opened.

`Thermo On/OFF`: the valve closes, depending on [F-0B] when there is no heating demand from the main zone. Enable this setting to:

- avoid leaving water supply to the heat emitters in the main LWT zone (through the mixing valve station) when there is request from the additional LWT zone.
- activate the On/OFF pump of the mixing valve station ONLY when there is demand. See "5 Application guidelines" [▸ 24].

#	Code	Description
N/A	[F-0B]	The shut-off valve: ▪ 0 (No)(default): is NOT influenced by heating or cooling demand. ▪ 1 (Yes): closes when there is NO heating or cooling demand.

INFORMATION

The setting [F-0B] is only valid when there is a thermostat or external room thermostat request setting (NOT in case of leaving water temperature setting).

Operation range

Depending on the average outdoor temperature, the operation of the unit in space heating is prohibited.

`Space heating OFF temp`: When the averaged outdoor temperature raises above this value, space heating is turned OFF to avoid overheating.

#	Code	Description
[A.3.3.1]	[4-02]	14°C~35°C

9.4.2 Domestic hot water control: advanced

Preset tank temperatures

Only applicable when domestic hot water preparation is scheduled or scheduled + reheat.

You can define preset tank temperatures:

- storage economic
- storage comfort
- reheat
- reheat hysteresis

Preset values make it easy to use the same value in the schedule. If you later want to change the value, you only have to do it in 1 place (see also operation manual and/or user reference guide).

`Storage comfort`

When programming the schedule, you can make use of the tank temperatures set as preset values. The tank will then heat up until these setpoint temperatures have been reached. Additionally, a storage stop can be programmed. This feature puts a stop to tank heating even if the setpoint has NOT been reached. Only program a storage stop when tank heating is absolutely undesirable.

#	Code	Description
[7.4.3.1]	[6-0A]	30°C~[6-0E]°C

`Storage eco`

The storage economic temperature denotes the lower desired tank temperature. It is the desired temperature when a storage economic action is scheduled (preferably during day).

#	Code	Description
[7.4.3.2]	[6-0B]	30°C~min(50, [6-0E])°C

Reheat

The desired reheat tank temperature is used:

- in reheat mode of scheduled + reheat mode: The guaranteed minimum tank temperature is set by $T_{HP\ OFF}$–[6-08], which is either [6-0C] or the weather-dependent setpoint, minus the reheat hysteresis. If the tank temperature drops below this value, the tank is heated up.

#	Code	Description
[7.4.3.3]	[6-0C]	30°C~min(50, [6-0E])°C

Reheat hysteresis

Only applicable when domestic hot water preparation is scheduled + reheat.

#	Code	Description
N/A	[6-08]	2°C~20°C

Weather dependent

The weather dependent installer settings define the parameters for the weather dependent operation of the unit. When weather dependent operation is active the desired tank temperature is determined automatically depending on the averaged outdoor temperature: low outdoor temperatures will result in higher desired tank temperatures as the cold water tap is colder and vice versa. In case of scheduled or scheduled+reheat domestic hot water preparation, the storage comfort temperature is weather dependent (according to the weather dependent curve), the storage economic and reheat temperature are NOT weather dependent. In case of reheat only domestic hot water preparation, the desired tank temperature is weather dependent (according to the weather dependent curve). During weather dependent operation, the end-user cannot adjust the desired tank temperature on the user interface.

#	Code	Description
[A.4.6]	N/A	Desired temperature mode: ▪ `Fixed`: disabled. All desired tank temperature are NOT weather dependent. ▪ `Weather dep.`: enabled. In scheduled or scheduled+reheat mode, the storage comfort temperature is weather dependent. Storage economic and reheat temperatures are NOT weather dependent. In reheat mode, the desired tank temperature is weather dependent. **Note:** When the displayed tank temperature is weather dependent, it cannot be adjusted on the user interface.

#	Code	Description
[A.4.7]	[0-0E] [0-0D] [0-0C] [0-0B]	`Weather-dependent curve` 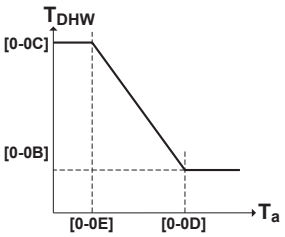 ▪ T_{DHW}: The desired tank temperature. ▪ T_a: The (averaged) outdoor ambient temperature ▪ [0-0E]: low outdoor ambient temperature: –40°C~5°C ▪ [0-0D]: high outdoor ambient temperature: 10°C~25°C ▪ [0-0C]: desired tank temperature when the outdoor temperature equals or drops below the low ambient temperature: 45°C~[6-0E]°C ▪ [0-0B]: desired tank temperature when the outdoor temperature equals or rises above the high ambient temperature: 35°C~[6-0E]°C

Also see "9.3 Weather-dependent curve" [▶ 114] for more information about weather-dependent curves.

Heat pump operation

#	Code	Description
N/A	[6-00]	The temperature difference determining the heat pump ON temperature. 2°C~40°C
N/A	[6-01]	The temperature difference determining the heat pump OFF temperature. 0°C~10°C

Example: setpoint (T_U)>maximum heat pump temperature–[6-01]

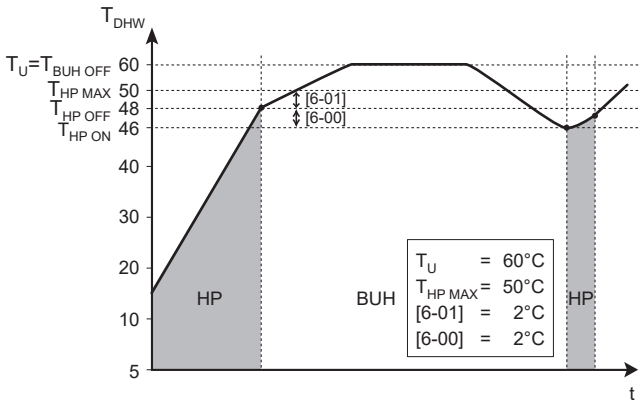

HP Heat pump. If heating up time by the heat pump takes too long, auxiliary heating by the backup heater can take place.

BUH Backup heater

$T_{BUH\ OFF}$ Backup heater OFF temperature (T_U)
$T_{HP\ MAX}$ Maximum heat pump temperature at sensor in domestic hot water tank
$T_{HP\ OFF}$ Heat pump OFF temperature ($T_{HP\ MAX}$–[6-01])
$T_{HP\ ON}$ Heat pump ON temperature ($T_{HP\ OFF}$–[6-00])
T_{DHW} Domestic hot water temperature
T_U User setpoint temperature (as set on the user interface)
t Time

Example: setpoint (T_U)≤maximum heat pump temperature–[6-01] ($T_{HP\ MAX}$–[6-01])

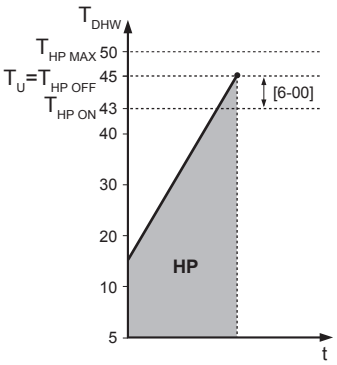

HP Heat pump. If heating up time by the heat pump takes too long, auxiliary heating by the booster heater can take place.
$T_{HP\ MAX}$ Maximum heat pump temperature at sensor in domestic hot water tank
$T_{HP\ OFF}$ Heat pump OFF temperature ($T_{HP\ MAX}$–[6-01])
$T_{HP\ ON}$ Heat pump ON temperature ($T_{HP\ OFF}$–[6-00])
T_{DHW} Domestic hot water temperature
T_U User setpoint temperature (as set on the user interface)
t Time

INFORMATION

The maximum heat pump temperature depends on the ambient temperature. For more information, see the operation range.

Timers for simultaneous request space and domestic hot water operation

#	Code	Description
N/A	[8-00]	Minimum running timer for domestic hot water operation. Do not change.
N/A	[8-01]	Maximum running time for domestic hot water operation. Domestic hot water heating stops even when the target domestic hot water temperature is NOT reached. ▪ When system layout = Room thermostat control: This preset value is only taken into account if there is a request for space heating or cooling. If there is NO request for space heating/cooling, the tank is heated until the setpoint has been reached. ▪ When system layout ≠ Room thermostat control: This preset value is always taken into account. Range: 5~95 minutes
N/A	[8-02]	Anti-recycling time. Minimum time between two cycles for domestic hot water. Range: 0~10 hours **Remark:** The minimum time is 0.5 hours even when the selected value is 0.

[8-02]: Anti-recycling time

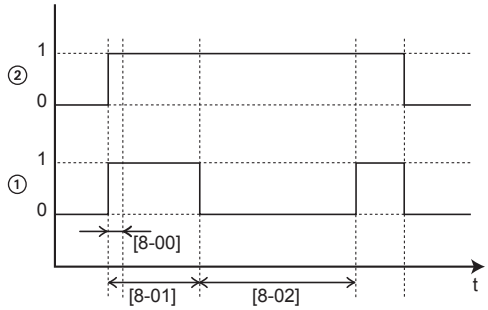

1 Heat pump domestic hot water heating mode (1=active, 0=not active)
2 Hot water request for heat pump (1=request, 0=no request)
t Time

Disinfection

Applies only to installations with a domestic hot water tank.

The disinfection function disinfects the domestic hot water tank by periodically heating the domestic hot water to a specific temperature.

CAUTION

The disinfection function settings MUST be configured by the installer according to the applicable legislation.

#	Code	Description
[A.4.4.1]	[2-01]	`Disinfection` ▪ 0: `No` ▪ 1: `Yes`
[A.4.4.2]	[2-00]	`Operation day`: ▪ 0: `Each day` ▪ 1: `Monday` ▪ 2: `Tuesday` ▪ 3: `Wednesday` ▪ 4: `Thursday` ▪ 5: `Friday` ▪ 6: `Saturday` ▪ 7: `Sunday`
[A.4.4.3]	[2-02]	`Start time`: 00~23:00, step: 1:00.
[A.4.4.4]	[2-03]	`Temperature target`: fixed value
[A.4.4.5]	[2-04]	`Duration` Range: 40~60 minutes

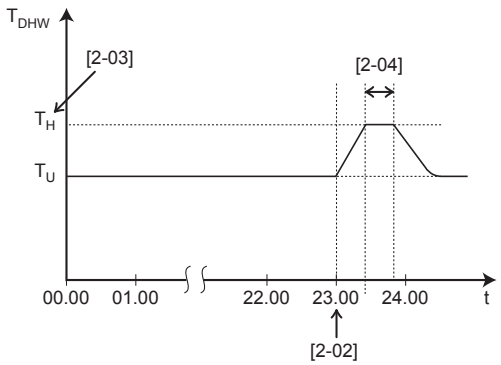

T_{DHW} Domestic hot water temperature
T_U User setpoint temperature
T_H High setpoint temperature [2–03]
t Time

WARNING

Be aware that the domestic hot water temperature at the hot water tap will be equal to the value selected in field setting [2-03] after a disinfection operation.

When the high domestic hot water temperature can be a potential risk for human injuries, a mixing valve (field supply) shall be installed at the hot water outlet connection of the domestic hot water tank. This mixing valve shall secure that the hot water temperature at the hot water tap never rise above a set maximum value. This maximum allowable hot water temperature shall be selected according to the applicable legislation.

CAUTION

Be sure that the disinfection function start time [A.4.4.3] with defined duration [A.4.4.5] is NOT interrupted by possible domestic hot water demand.

NOTICE

Disinfection mode. Even if you turn OFF domestic hot water operation via the DHW tank temperature home page (Tank), disinfection mode will remain active.

INFORMATION

Disinfection function is restarted in case the domestic hot water temperature drops 5°C below the disinfection target temperature within the duration time.

INFORMATION

An AH error occurs if you do the following during disinfection:

- Set the user permission level to Installer.
- Go to the DHW tank temperature home page (Tank).
- Press ⏻ to interrupt the disinfection.

9.4.3 Heat source settings

Backup heater

Backup heater operation mode: defines when backup heater operation is disabled or only allowed during domestic hot water operation. This setting is only overruled when backup heating is required during defrost operation or malfunctioning of the outdoor unit (when [A.6.C] is enabled).

#	Code	Description
[A.5.1.1]	[4-00]	Backup heater operation: ▪ 0: `Disabled` ▪ 1: `Enabled` ▪ 2: `Only DHW`
N/A	[5-00]	Is backup heater operation allowed above equilibrium temperature during space heating operation? ▪ 1: NOT allowed ▪ 0: Allowed
[A.5.1.4]	[5-01]	`Equilibrium temp.` Outdoor temperature below which operation of the backup heater is allowed. Range: –15°C~35°C

INFORMATION

Only for systems with integrated domestic hot water tank: If backup heater operation during space heating needs to be limited but can be allowed for domestic hot water operation, then set [4-00] to 2.

Auto emergency

When the heat pump fails to operate, the gas boiler can serve as an emergency back-up heater and either automatically or non-automatically take over the entire heat load.

- When auto emergency is set to `Automatic` and a heat pump failure occurs, the boiler will automatically take over the heat load.
- When auto emergency is set to `Manual` and a heat pump failure occurs, the domestic hot water and space heating operations will stop and need to be recovered manually. The user interface will then ask the user to confirm whether the boiler can take over the entire heat load or not.

When the heat pump fails, ⓘ will appear on the user interface. If the house is unattended for longer periods, we recommend to set [A.6.C] `Emergency` to `Automatic`.

#	Code	Description
[A.6.C]	N/A	`Emergency`: ▪ 0: `Manual` ▪ 1: `Automatic`

INFORMATION

The auto emergency setting can be set in the menu structure of the user interface only.

INFORMATION

If a heat pump failure occurs and [A.6.C] is set to `Manual`, the room frost protection function, the underfloor heating screed dryout function, and the water pipe antifreeze function will remain active even if the user does NOT confirm emergency operation.

Bivalent

Only applies to indoor unit installations with an auxiliary boiler (alternating operation, connected in parallel). The purpose of bivalent operation is to determine which heating source can/will provide the space heating, either the indoor unit or an auxiliary boiler.

#	Code	Description
N/A	[C-02]	Indicates if the space heating is also performed by means of another heat source than the system. ▪ 0 No ▪ 1 `Bivalent` : Installed. The auxiliary boiler (gas boiler, oil burner) will operate when the outdoor ambient temperature is low. During bivalent operation, the heat pump is turned off. Set this value in case an auxiliary boiler is used.

- If bivalent is enabled: When the outdoor temperature drops below the bivalent ON, the space heating by the indoor unit stops automatically and the permission signal for the auxiliary boiler is active.
- If bivalent is disabled: Space heating is only done by the indoor unit within the operation range. The permission signal for the auxiliary boiler is always inactive.

INFORMATION

- The bivalent operation function has no impact on the domestic water heating mode. The domestic hot water is still and only heated by the indoor unit.
- The permission signal for the auxiliary boiler is located on the EKRP1HBAA (digital I/O PCB). When it is activated, the contact X1, X2 is closed and open when it is deactivated. See illustration below for the schematic location of this contact.

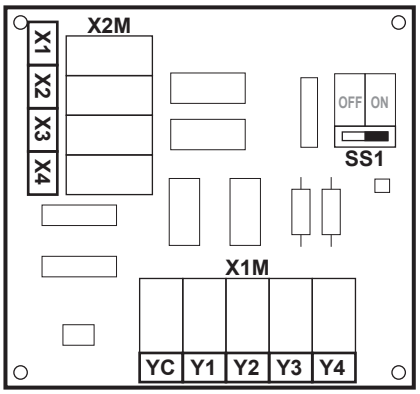

Boiler efficiency

Depending on the used boiler, this should be chosen as follows:

#	Code	Description
N/A	[7-05]	`Boiler efficiency` ▪ 0: `Very high` ▪ 1: `High` ▪ 2: `Medium` ▪ 3: `Low` ▪ 4: `Very low`

You can set the following values based on the outdoor temperature:

#	Code	Description
N/A	[C-03]	Bivalent activation temperature: defines the outdoor temperature below which the permission signal for the auxiliary boiler is active (X1 and X2 on EKRP1HBAA is closed) and space heating by indoor unit is stopped. –25°C~25°C
N/A	[C-04]	Bivalent hysteresis temperature: defines the temperature difference between the ON temperature and the OFF temperature. 2°C~10°C

Permission signal X1–X2

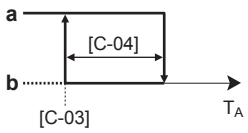

T_A	Outdoor temperature
[C-03]	Bivalent ON temperature (fixed)
a	Auxiliary boiler active
b	Auxiliary boiler inactive

CAUTION

Make sure to observe all rules mentioned in application guideline 5 when bivalent operation function is enabled.

Daikin shall NOT be held liable for any damage resulting from failure to observe this rule.

Backup heater only ambient temperature

The outdoor unit heat pump can operate until an ambient temperature of –7°C by default. Depending on the installation area of the outdoor unit, you may want to lower the ambient temperature setting to –15°C. In this case, the backup heater will take over operation from the outdoor unit. See "6.1.2 Additional installation site requirements of the outdoor unit in cold climates" [▸ 40] for more information. Under certain conditions, the installation of EKBPHT03D may be required.

#	Code	Description
A.5.1.5	[8-0E]	`BUH only ambient temp.` Range: –15°C~7°C

9.4.4 System settings

Priorities

For systems with an integrated domestic hot water tank

#	Code	Description
N/A	[5-02]	Space heating priority. Defines whether backup heater will assist the heat pump during domestic hot water operation. Consequence: Shorter tank heating operation time and shorter interruption of the space heating cycle. This setting MUST always be 1. [5-01] Equilibrium temperature and [5-03] Space heating priority temperature are related to backup heater. So, you must set [5-03] equal or a few degrees higher than [5-01]. If the backup heater operation is limited ([4-00]=0) and the outdoor temperature is lower than setting [5-03], the domestic hot water will not be heated with the backup heater.
N/A	[5-03]	Space heating priority temperature. Defines the outdoor temperature which below the backup heater will assist during domestic hot water heating.
N/A	[5-04]	Setpoint correction for domestic hot water temperature. Setpoint correction for the domestic hot water temperature, to be applied at low outdoor temperature when space heating priority is enabled. The corrected (higher) setpoint will make sure that the total heat capacity of the water in the tank remains approximately unchanged, by compensating for the colder bottom water layer of the tank (because the heat exchanger coil is not operational) with a warmer top layer. Range: 0°C~20°C

Auto-restart

When power returns after a power supply failure, the auto restart function reapplies the remote controller settings at the time of the power failure. Therefore, it is recommended to always enable the function.

#	Code	Description
[A.6.1]	[3-00]	Is the auto restart function of the unit allowed? ▪ 0: **No** ▪ 1: **Yes**

Preferential kWh rate power supply

INFORMATION

The preferential kWh rate power supply contact is connected to the same terminals (X5M/9+10) as the safety thermostat for the additional zone. It is only possible for the system to have EITHER preferential kWh rate power supply OR a safety thermostat for the additional zone.

#	Code	Description
N/A	[D-01]	Connection to a preferential kWh rate power supply or a safety thermostat: ▪ 0: The outdoor unit is connected to a normal power supply. ▪ 1: The outdoor unit is connected to a preferential kWh rate power supply. When the preferential kWh rate signal is sent by the electricity company, the contact will open and the unit will go in forced off mode. When the signal is released again, the voltage-free contact will close and the unit will restart operation. Therefore, always enable the auto restart function. ▪ 2: The outdoor unit is connected to a preferential kWh rate power supply. When the preferential kWh rate signal is sent by the electricity company, the contact will close and the unit will go in forced off mode. When the signal is released again, the voltage-free contact will open and the unit will restart operation. Therefore, always enable the auto restart function. ▪ 3: A safety thermostat is connected to the system (normal closed contact)
N/A	[D-00]	Which heaters are allowed to operate during preferential kWh rate power supply? ▪ 0: `None` ▪ 1: N/A ▪ 2: `BUH only` ▪ 3: N/A See table below. Setting 2 is only meaningful if the preferential kWh rate power supply is of type 1 or indoor unit is connected to a normal kWh rate power supply (via X2M/5-6) and the backup heater is NOT connected to the preferential kWh rate power supply.
N/A	[D-05]	`Forced pump OFF` : ▪ 0: `Forced off` ▪ 1: `As normal`

Do NOT use 1 or 3. Setting [D-00] to 1 or 3 when [D-01] is set to 1 or 2 will reset [D-00] back to 0, as the system does not have a booster heater. Only set [D-00] to the values in the table below:

[D-00]	Backup heater	Compressor
0 (default)	Forced OFF	Forced OFF
2	Allowed	

Power saving function

Defines whether the outdoor unit power supply can be interrupted (internally by indoor unit control) during stand-still conditions (no space heating/cooling nor domestic hot water demand). The final decision to allow power interruption of the outdoor unit during standstill depends on the ambient temperature, compressor conditions and minimum internal timers.

This setting is enabled by default and is read-only.

#	Code	Description
N/A	[E-08]	Power saving function for outdoor unit. ▪ 0: Disabled ▪ 1: Enabled (default)

Power consumption control

See "5 Application guidelines" [▶ 24] for detailed information about this functionality:

#	Code	Description
[A.6.3.1]	[4-08]	`Mode`: ▪ 0 (`No limitation`)(default): Disabled. ▪ 1 (`Continuous`): Enabled: You can set one power limitation value (in A or kW) to which the system power consumption will be limited for all the time. ▪ 2 (`Digital inputs`): Enabled: You can set up to four different power limitation values (in A or kW) to which the system power consumption will be limited when the corresponding digital input asks.
[A.6.3.2]	[4-09]	`Type`: ▪ 0 (`Current`): The limitation values are set in A. ▪ 1 (`Power`)(default): The limitation values are set in kW.
[A.6.3.3]	[5-05]	`Amp. value` : Only applicable in case of full time power limitation mode. 0 A~50 A, step 1 A
[A.6.3.4]	[5-09]	`kW value` : Only applicable in case of full time power limitation mode. 0 kW~20 kW, step 0.5 kW
`Amp. limits for DI`: Only applicable in case of power limitation mode based on digital inputs and based on current values.		

#	Code	Description
N/A	[5-05]	`Limit DI1` 0 A~50 A, step 1 A
N/A	[5-06]	`Limit DI2` 0 A~50 A, step 1 A
N/A	[5-07]	`Limit DI3` 0 A~50 A, step 1 A
N/A	[5-08]	`Limit DI4` 0 A~50 A, step 1 A
`kW limits for DI`: Only applicable in case of power limitation mode based on digital inputs and based on power values.		
N/A	[5-09]	`Limit DI1` 0 kW~20 kW, step 0.5 kW
N/A	[5-0A]	`Limit DI2` 0 kW~20 kW, step 0.5 kW
N/A	[5-0B]	`Limit DI3` 0 kW~20 kW, step 0.5 kW
N/A	[5-0C]	`Limit DI4` 0 kW~20 kW, step 0.5 kW

Average timer

The average timer corrects the influence of ambient temperature variations. The weather-dependent set point calculation is done on the average outdoor temperature.

The outdoor temperature is averaged over the selected time period.

#	Code	Description
[A.6.4]	[1-0A]	Outdoor average timer: ▪ 0: No averaging ▪ 1: 12 hours ▪ 2: 24 hours ▪ 3: 48 hours ▪ 4: 72 hours

Ext. amb. sensor offset.

ONLY applicable in case of an external outdoor ambient sensor is connected and configured.

You can calibrate the external outdoor ambient temperature sensor. It is possible to give an offset to the thermistor value. The setting can be used to compensate for situations where the external outdoor ambient sensor cannot be installed on the ideal installation location (see installation).

#	Code	Description
[A.6.5]	[2-0B]	`Ext amb. sensor offset`: Offset on the ambient temperature sensor measured on the external outdoor temperature sensor. –5°C~5°C, step: 0.5°C

Disable protections

The software is equipped with an "installer-on-site" mode ([A.6.D]: `Disable protections`) that disables automatic operation by the unit.

#	Code	Description
[A.6.D]	N/A	▪ ON: Automatic operation is disabled. All protective functions are disabled. If the user interface home pages are off, the unit will NOT operate automatically. To enable automatic operation and the protective functions, set Disable protections=OFF. ▪ OFF: 12 hours after the first power-on, the unit will automatically set Disable protections=OFF, ending "installer-on-site" mode and enabling the protective functions. If the installer returns to the site, the installer has to set Disable protections=ON manually.

Pump operation

When the pump operation function is disabled the pump will stop if the outdoor temperature is higher than the value set by [4-02] or if the outdoor temperature drops below the value set by [F-01]. When the pump operation is enabled, the pump operation is possible at all outdoor temperatures.

#	Code	Description
N/A	[F-00]	Pump operation: ▪ 0: Disabled if outdoor temperature is higher than [4-02] or lower than [F-01] depending on heating operation mode. ▪ 1: Possible at all outdoor temperatures.

Pump speed limitation

Pump speed limitation main zone [9-0E] and pump speed limitation additional zone [9-0D] define the maximum pump speed. In normal conditions, the default setting should NOT be modified. The pump speed limitation will be overruled when the flow rate is in the range of the minimum flow (error 7H).

#	Code	Description
N/A	[9-0E]	Pump speed limitation **main zone** ▪ 0: No limitation. ▪ 1~4: General limitation. There is limitation in all conditions. The required delta T control and comfort are **NOT** guaranteed. ▪ 5~8 (default: 6): Limitation when no actuators. When there is no heating output, the pump speed limitation is applicable. When there is heating output, the pump speed is only determined by delta T in relation to the required capacity. With this limitation range, delta T is possible and the comfort is guaranteed.
N/A	[9-0D]	Pump speed limitation **additional zone** ▪ 0: No limitation. ▪ 1~4: General limitation. There is limitation in all conditions. The required delta T control and comfort are **NOT** guaranteed. ▪ 5~8 (default: 6): Limitation when no actuators. When there is no heating output, the pump speed limitation is applicable. When there is heating output, the pump speed is only determined by delta T in relation to the required capacity. With this limitation range, delta T is possible and the comfort is guaranteed.

The maximum values depend on the unit type:

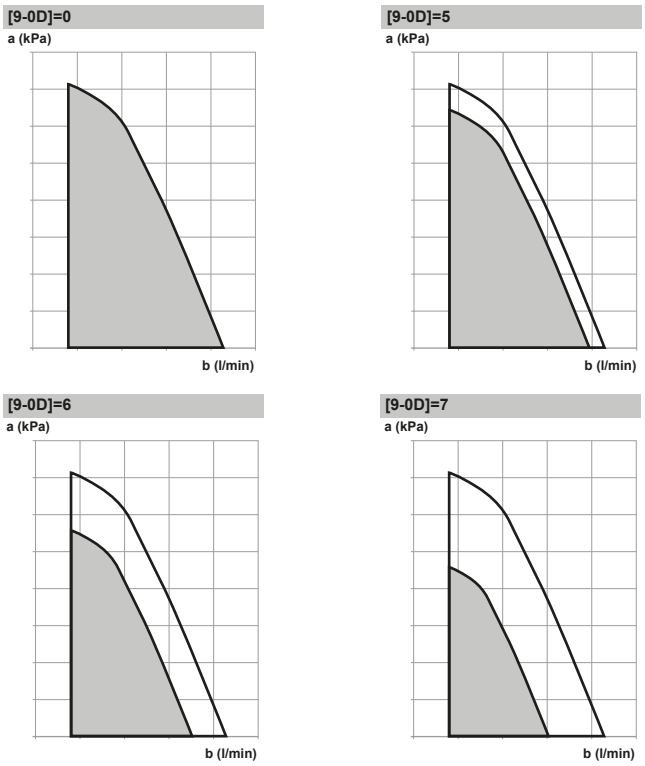

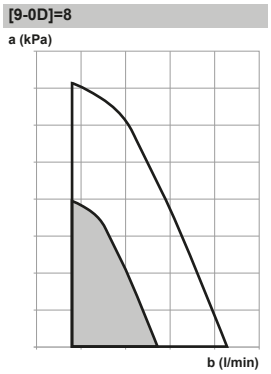

a External static pressure
b Water flow rate

9.5 Menu structure: Overview user settings

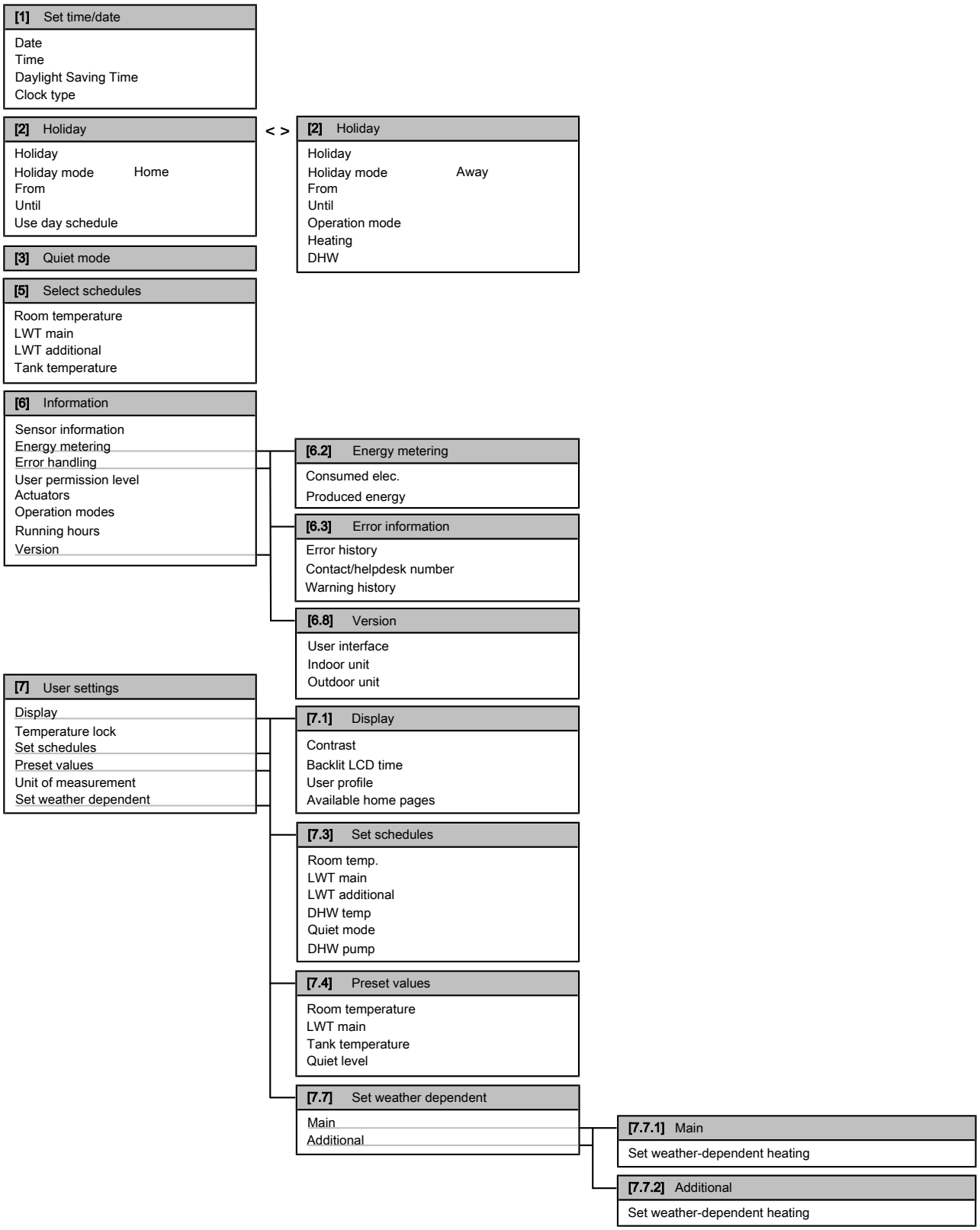

INFORMATION

Depending on the selected installer settings and unit type, settings will be visible/invisible.

9.6 Menu structure: Overview installer settings

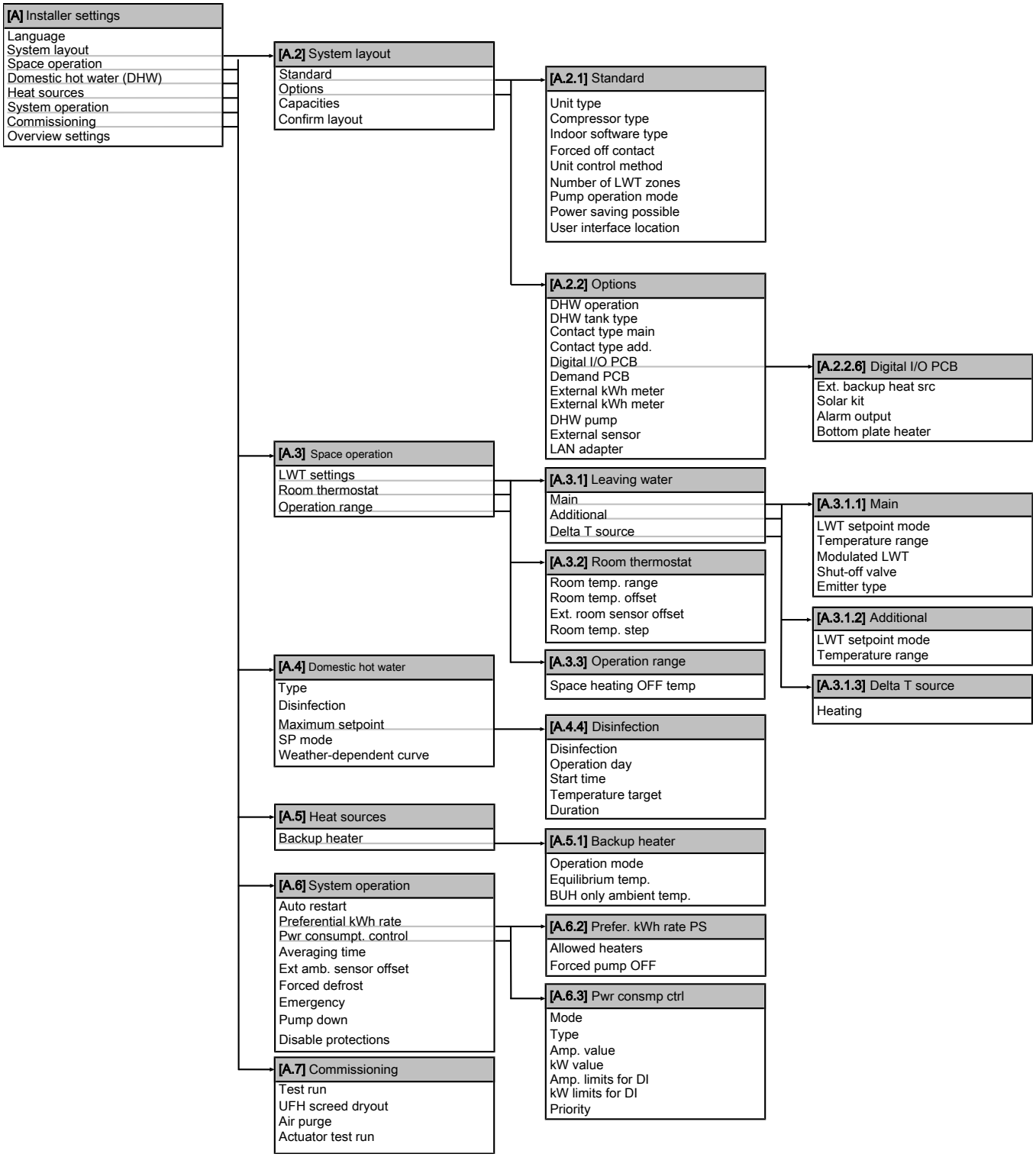

INFORMATION

Solar kit settings are shown but are NOT applicable for this unit. Settings shall NOT be used or changed.

INFORMATION

Depending on the selected installer settings and unit type, settings will be visible/invisible.

10 Commissioning

INFORMATION

Protective functions – "Installer-on-site mode". The software is equipped with protective functions, such as room antifrost. The unit automatically runs these functions when necessary. (If the user interface home pages are off, the unit will not operate automatically.)

During installation or service this behaviour is undesired. Therefore, the protective functions can be disabled:

- **At first power-on:** The protective functions are disabled by default. After 36 h they will be automatically enabled.
- **Afterwards:** An installer can manually disable the protective functions by setting [A.6.D]: `Disable protections`=`On`. After his work is done, he can enable the protective functions by setting [A.6.D]: `Disable protections`=`OFF`.

In this chapter

10.1 Overview: Commissioning 141
10.2 Precautions when commissioning 141
10.3 Checklist before commissioning 142
10.4 Checklist during commissioning 143
10.4.1 To check the minimum flow rate 143
10.4.2 Air purge function 144
10.4.3 To perform a test run 145
10.4.4 To perform an actuator test run 146
10.4.5 Underfloor heating screed dryout 146

10.1 Overview: Commissioning

This chapter describes what you have to do and know to commission the system after it is installed and configured.

Typical workflow

Commissioning typically consists of the following stages:

1. Checking the "Checklist before commissioning".
2. Performing an air purge.
3. Performing a test run for the system.
4. If necessary, performing a test run for one or more actuators.
5. If necessary, performing an underfloor heating screed dryout.

10.2 Precautions when commissioning

INFORMATION

During the first running period of the unit, the required power may be higher than stated on the nameplate of the unit. This phenomenon is caused by the compressor, that needs a continuous run time of 50 hours before reaching smooth operation and stable power consumption.

NOTICE

ALWAYS operate the unit with thermistors and/or pressure sensors/switches. If NOT, burning of the compressor might be the result.

NOTICE

ALWAYS complete the refrigerant piping of the unit before operating. If NOT, the compressor will break.

10.3 Checklist before commissioning

After the installation of the unit, first check the items listed below. Once all checks are fulfilled, the unit must be closed. Power-up the unit after it is closed.

☐	You read the complete installation instructions, as described in the **installer reference guide**.
☐	The **indoor unit** is properly mounted.
☐	The **outdoor unit** is properly mounted.
☐	The following **field wiring** has been carried out according to this document and the applicable legislation: ▪ Between the local supply panel and the outdoor unit ▪ Between indoor unit and outdoor unit ▪ Between the local supply panel and the indoor unit ▪ Between the indoor unit and the valves (if applicable) ▪ Between the indoor unit and the room thermostat (if applicable)
☐	The system is properly **earthed** and the earth terminals are tightened.
☐	The **fuses** or locally installed protection devices are installed according to this document, and have NOT been bypassed.
☐	The **power supply voltage** matches the voltage on the identification label of the unit.
☐	There are NO **loose connections** or damaged electrical components in the switch box.
☐	There are NO **damaged components** or **squeezed pipes** on the inside of the indoor and outdoor units.
☐	**Backup heater circuit breaker** F1B (field supply) is turned ON.
☐	There are NO **refrigerant leaks**.
☐	The **refrigerant pipes** (gas and liquid) are thermally insulated.
☐	The correct pipe size is installed and the **pipes** are properly insulated.
☐	There is NO **water leak** inside the indoor unit.
☐	The **shut-off valves** are properly installed and fully open.
☐	The **stop valves** (gas and liquid) on the outdoor unit are fully open.
☐	The **air purge** valve is open (at least 2 turns).
☐	The **pressure relief valve** purges water when opened. Clean water must come out.
☐	The **domestic hot water tank** is filled completely.

10.4 Checklist during commissioning

☐	The **minimum flow rate** during backup heater/defrost operation is guaranteed in all conditions. See "To check the water volume and flow rate" in "7.2 Preparing water piping" [▶ 54].
☐	To perform an **air purge**.
☐	To perform a **test run**.
☐	To perform an **actuator test run**.
☐	**Underfloor screed dryout function** The underfloor screed dryout function is started (if necessary).

10.4.1 To check the minimum flow rate

Mandatory procedure for the additional zone

1. Confirm according to the hydraulic configuration which space heating loops can be closed due to mechanical, electronic, or other valves.
2. Close all space heating loops that can be closed (see previous step).
3. Start the pump test run operation (see "10.4.4 To perform an actuator test run" [▶ 146]).
4. Go to [6.1.8]: ☰ > `Information` > `Sensor information` > `Flow rate` to check the flow rate. During pump test run operation, the unit can operate below this minimum required flow rate that is needed during defrost/backup heater operation.

Bypass valve foreseen?	
Yes	**No**
Modify the bypass valve setting to reach the minimum required flow rate + 2 l/min	In case the actual flow rate is below the minimum flow rate (required during defrost/backup heater operation), modifications at hydraulic configuration are required. Increase the space heating loops that can NOT be closed or install a pressure controlled bypass valve.

Recommended procedure for the main zone

5. Confirm according to the hydraulic configuration which space heating loops can be closed due to mechanical, electronic, or other valves.
6. Close all space heating loops that can be closed (see previous step).
7. Create a thermo request on the main zone only.
8. Wait 1 minute until the unit is stabilized.
9. If the additional pump is still assisting (the green LED on the right hand sided pump is ON), increase the flow until the additional pump is NOT assisting anymore (LED is OFF).
10. Go to [6.1.8]: ☰ > `Information` > `Sensor information` > `Flow rate` to check the flow rate.

Bypass valve foreseen?	
Yes	**No**
Modify the bypass valve setting to reach the minimum required flow rate + 2 l/min	In case the actual flow rate is below the minimum flow rate (required during defrost/backup heater operation), modifications at hydraulic configuration are required. Increase the space heating loops that can NOT be closed or install a pressure controlled bypass valve.

10.4.2 Air purge function

Purpose

When commissioning and installing the unit, it is very important to remove all air in the water circuit. When the air purge function is running, the pump operates without actual operation of the unit and the removal of air in the water circuit will start.

NOTICE

Before starting the air purge, open the safety valve and check if the circuit is sufficiently filled with water. Only if water escapes the valve after opening it, you can start the air purge procedure.

Manual or automatic

There are 2 modes for purging air:

- Manual: You can set the pump speed to low or high. You can set the circuit (the position of the 3-way valve) to Space or Tank. Air purge must be performed for both space heating and tank (domestic hot water) circuits.
- Automatic: The unit automatically changes the pump speed and switches the position of the 3-way valve between the space heating and the domestic hot water circuit.

Typical workflow

Purging the air from the system should consist of:

1. Performing a manual air purge for both zones
2. Performing an automatic air purge for both zones

INFORMATION

Start by performing a manual air purge. When almost all the air is removed, perform an automatic air purge. If necessary, repeat performing the automatic air purge until you are sure that all air is removed from the system. During air purge function, pump speed limitation [9-0D] is NOT applicable.

The air purge function automatically stops after 30 minutes.

INFORMATION

For best results, air purge each loop separately.

To perform a manual air purge

> **INFORMATION**
> When purging the main zone, make sure the setpoint for the main zone is at least 5°C higher than the actual water temperature inside the unit.

Prerequisite: Make sure that the leaving water temperature home page, room temperature home page, and domestic hot water home page are turned OFF.

1. Set the user permission level to Installer. See "To set the user permission level to Installer" [▸ 99].
2. Set the air purge mode: go to [A.7.3.1] ☰ > `Installer settings` > `Commissioning` > `Air purge` > `Type`.
3. Select `Manual` and press OK.
4. Go to [A.7.3.4] ☰ > `Installer settings` > `Commissioning` > `Air purge` > `Start air purge` and press OK to start the air purge function.

   Result: The manual air purge starts and the following screen appears.
5. Use the ▲ and ▼ buttons to set the desired pump speed.

   Result: `Low`

   Result: `High`

To perform an automatic air purge

> **INFORMATION**
> When purging the main zone, make sure the setpoint for the main zone is at least 5°C higher than the actual water temperature inside the unit.

Prerequisite: Make sure that the leaving water temperature home page, room temperature home page, and domestic hot water home page are turned OFF.

1. Set the user permission level to Installer. See "To set the user permission level to Installer" [▸ 99].
2. Set the air purge mode: go to [A.7.3.1] ☰ > `Installer settings` > `Commissioning` > `Air purge` > `Type`.
3. Select `Automatic` and press OK.
4. Go to [A.7.3.4] ☰ > `Installer settings` > `Commissioning` > `Air purge` > `Start air purge` and press OK to start the air purge function.

   Result: Air purging will start and the following screen will be shown.

10.4.3 To perform a test run

> **INFORMATION**
> The test run only applies to the additional temperature zone.

Prerequisite: Make sure that the leaving water temperature home page, room temperature home page, and domestic hot water home page are turned OFF.

1. Set the user permission level to Installer. See "To set the user permission level to Installer" [▸ 99].
2. Go to [A.7.1]: ☰ > `Installer settings` > `Commissioning` > `Test run`.
3. Select a test and press OK. **Example:** `Heating`.

4 Select OK and press OK.

Result: The test run starts. It stops automatically when done (±30 min). To stop it manually, press ⏻, select OK and press OK.

> **INFORMATION**
>
> If 2 user interfaces are present, you can start a test run from both user interfaces.
>
> - The user interface used to start the test run displays a status screen.
> - The other user interface displays a "busy" screen. You cannot use the user interface as long as the "busy" screen is shown.

10.4.4 To perform an actuator test run

Perform an actuator test run to confirm the operation of the different actuators. For example, when you select `Pump`, a test run of the pump will start.

Purpose of the actuator test run is to confirm the operation of the different actuators (e.g., when you select pump operation, a test run of the pump will start).

Prerequisite: Make sure that the leaving water temperature home page, room temperature home page, and domestic hot water home page are turned OFF.

1 Set the user permission level to Installer. See "To set the user permission level to Installer" [▸ 99].

2 Go to [A.7.4]: ☰ > `Installer settings` > `Commissioning` > `Actuator test run`.

3 Select an actuator and press OK. **Example:** `Pump`.

4 Select OK and press OK.

Result: The actuator test run starts. It automatically stops when finished. To stop it manually, press ⏻, select OK and press OK.

10.4.5 Underfloor heating screed dryout

The underfloor heating (UFH) screed dryout function is used for drying out the screed of an underfloor heating system during the construction of the building.

The UFH screed dryout function can be executed without finishing the outdoor installation. In this case, the backup heater will perform the screed dryout and supply the leaving water without heat pump operation.

If the outdoor unit is not yet installed, connect the main power supply cable to the indoor unit via X2M/30 and X2M/31. See "8.3.1 To connect the main power supply" [▸ 82].

> **INFORMATION**
>
> - If `Emergency` is set to `Manual` ([A.6.C]=0), and the unit is triggered to start emergency operation, the user interface will ask confirmation before starting. The underfloor heating screed dryout function is active even if the user does NOT confirm emergency operation.
> - During underfloor heating screed dryout, pump speed limitation [9-0D] is NOT applicable.

NOTICE

The installer is responsible for:

- contacting the screed manufacturer for the maximum allowed water temperature, to avoid cracking the screed,
- programming the underfloor heating screed dryout schedule according to the initial heating instructions of the screed manufacturer,
- checking the proper functioning of the setup on a regular basis,
- performing the correct program complying with the type of the used screed.

NOTICE

To perform an underfloor heating screed dryout, room frost protection needs to be disabled ([2-06]=0). By default, it is enabled ([2-06]=1). However, due to the "installer-on-site" mode (see "Commissioning"), room frost protection will be automatically disabled for 36 hours after the first power-on.

If the screed dryout still needs to be performed after the first 36 hours of power-on, manually disable room frost protection by setting [2-06] to "0", and KEEP it disabled until the screed dryout has finished. Ignoring this notice will result in cracking of the screed.

NOTICE

For the underfloor heating screed dryout to be able to start, make sure the following settings are met:

- [4-00]=1
- [C-02]=0
- [D-01]=0
- [4-08]=0
- [4-01]≠1

The installer can program up to 20 steps. For each step he needs to enter:

1. the duration in hours, up to 72 hours,
2. the desired leaving water temperature, up to 55°C.

Example:

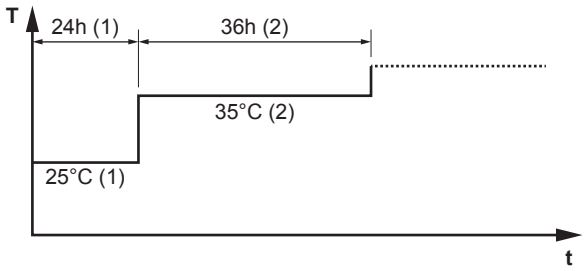

T	Desired leaving water temperature (15~55°C)
t	Duration (1~72 h)
(1)	Action step 1
(2)	Action step 2

To program an underfloor heating screed dryout schedule

1. Set the user permission level to Installer. See "To set the user permission level to Installer" [▸ 99].
2. Go to [A.7.2]: ☰ > `Installer settings` > `Commissioning` > `UFH screed dryout` > `Set dryout schedule`.
3. Use the ◀, ▶, ▲, and ▼ to program the schedule.

- Use ◀ and ▶ to scroll through the schedule.
- Use ▲ and ▼ to adjust the selection.
  If a time is selected, you can set the duration between 1 and 72 hours.
  If a temperature is selected, you can set the desired leaving water temperature between 15°C and 55°C.

4 To add a new step, select "–h" or "–" on an empty line and press ▲ ▼.

5 To delete a step, set the duration to "–" by pressing ▲ ▼.

6 Press OK to save the schedule.

> It is important that there is no empty step in the program. The schedule will stop when a blank step is programmed OR when 20 consecutive steps have been executed.

To perform an underfloor heating screed dryout

Prerequisite: Make sure there is ONLY 1 user interface connected to your system to perform an underfloor heating screed dryout.

Prerequisite: Make sure that the leaving water temperature home page, room temperature home page, and domestic hot water home page are turned OFF.

1 Go to [A.7.2]: ☰ > `Installer settings` > `Commissioning` > `UFH screed dryout`.

2 Set a dryout program.

3 Select `Start dryout` and press OK.

4 Select OK and press OK.

Result: The underfloor heating screed dryout starts and following screen will be shown. It stops automatically when done. To stop it manually, press ⏻, select OK and press OK.

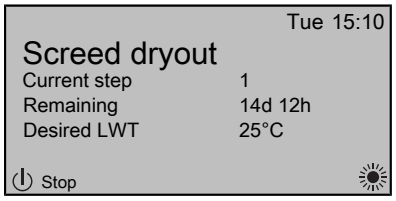

To readout the status of an underfloor heating screed dryout

1 Press ⌂.

2 The current step of the program, the total remaining time, and the current desired leaving water temperature will be displayed.

> **INFORMATION**
>
> There is limited access to the menu structure. Only the following menus can be accessed:
>
> - `Information`.
> - `Installer settings` > `Commissioning` > `UFH screed dryout`.

To interrupt an underfloor heating screed dryout

When the program is stopped by an error, an operation switch off, or a power failure, the U3 error will be displayed on the user interface. To resolve the error codes, see "13.4 Solving problems based on error codes" [▶ 165]. To reset the U3 error, your `User permission level` needs to be `Installer`.

1 Go to the underfloor heating screed dryout screen.

2 Press ⌂.

3 Press ⏻ to interrupt the program.

4 Select OK and press OK.

Result: The underfloor heating screed dryout program is stopped.

When the program is stopped due to an error, an operation switch-off, or a power failure, you can read out the underfloor heating screed dryout status.

5 Go to [A.7.2]: ☰ > `Installer settings` > `Commissioning` > `UFH screed dryout` > `Dryout status` > `Stopped at` and followed by the last executed step.

6 Modify and restart the execution of the program.

11 Hand-over to the user

Once the test run is finished and the unit operates properly, please make sure the following is clear for the user:

- Fill in the installer setting table (in the operation manual) with the actual settings.
- Make sure that the user has the printed documentation and ask him/her to keep it for future reference. Inform the user that he can find the complete documentation at the URL mentioned earlier in this manual.
- Explain the user how to properly operate the system and what to do in case of problems.
- Show the user what to do for the maintenance of the unit.
- Explain the user about energy saving tips as described in the operation manual.

12 Maintenance and service

NOTICE

Maintenance MUST be done by an authorized installer or service agent.

We recommend performing maintenance at least once a year. However, applicable legislation might require shorter maintenance intervals.

NOTICE

Applicable legislation on **fluorinated greenhouse gases** requires that the refrigerant charge of the unit is indicated both in weight and CO_2 equivalent.

Formula to calculate the quantity in CO_2 equivalent tonnes: GWP value of the refrigerant × total refrigerant charge [in kg] / 1000

In this chapter

12.1 Overview: Maintenance and service 151
12.2 Maintenance safety precautions 151
12.3 Checklist for yearly maintenance of the outdoor unit 152
12.4 Checklist for yearly maintenance of the indoor unit 152
12.4.1 To drain the domestic hot water tank 155
12.5 About cleaning the water filter in case of trouble 156
12.5.1 To remove the water filter 156
12.5.2 To clean the water filter in case of trouble 156
12.5.3 To install the water filter 158

12.1 Overview: Maintenance and service

This chapter contains information about:

- The yearly maintenance of the outdoor unit
- The yearly maintenance of the indoor unit

12.2 Maintenance safety precautions

DANGER: RISK OF ELECTROCUTION

DANGER: RISK OF BURNING

NOTICE: Risk of electrostatic discharge

Before performing any maintenance or service work, touch a metal part of the unit in order to eliminate static electricity and to protect the PCB.

WARNING

- Before carrying out any maintenance or repair activity, ALWAYS switch off the circuit breaker on the supply panel, remove the fuses or open the protection devices of the unit.
- Do NOT touch live parts for 10 minutes after the power supply is turned off because of high voltage risk.
- Please note that some sections of the electric component box are hot.
- Make sure you do NOT touch a conductive section.
- Do NOT rinse the unit. This may cause electric shocks or fire.

12.3 Checklist for yearly maintenance of the outdoor unit

Check the following at least once a year:

- Heat exchanger
  The heat exchanger of the outdoor unit can get blocked up due to dust, dirt, leaves, etc. It is recommended to clean the heat exchanger yearly. A blocked heat exchanger can lead to too low pressure or too high pressure leading to worse performance.

12.4 Checklist for yearly maintenance of the indoor unit

Check the following at least once a year:

- Water pressure
- Water filters
- Magnetic filter/dirt separator
- Water pressure relief valve
- Relief valve hose
- Pressure relief valve of the domestic hot water tank
- Switch box
- Descaling
- Chemical disinfection

Water pressure

Keep water pressure above 1 bar. If it is lower, add water.

Water filters

Clean the water filters.

NOTICE

Handle the water filters with care. Do NOT use excessive force when you reinsert the water filters so as NOT to damage the water filters mesh.

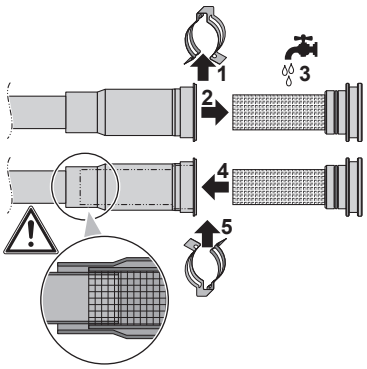

Magnetic filter/dirt separator

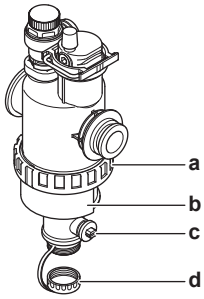

a Screw connection
b Magnetic sleeve
c Drain valve
d Drain cap

The yearly maintenance of the magnetic filter/dirt separator consists of:

- Checking if both parts of the magnetic filter/dirt separator are still screwed tight (a).
- Emptying the dirt separator as follows:

1 Take off the magnetic sleeve (b).

2 Unscrew the drain cap (d).

3 Connect a drain hose to the bottom of the water filter so that the water and dirt can be collected in a suitable container (bottle, sink...).

4 Open the drain valve for a couple of seconds (c).

Result: Water and dirt will come out.

5 Close the drain valve.

6 Screw the drain cap back on.

7 Reattach the magnetic sleeve.

8 Check the pressure of the water circuit. If required, add water.

NOTICE

- When checking the magnetic filter/dirt separator for tightness, hold it firmly, so as NOT to apply stress to the water piping.
- Do NOT isolate the magnetic filter/dirt separator by closing the shut-off valves. To properly empty the dirt separator, sufficient pressure is required.
- To prevent dirt from remaining in the dirt separator, ALWAYS take off the magnetic sleeve.
- ALWAYS first unscrew the drain cap, and connect a drain hose to the bottom of the water filter, then open the drain valve.

INFORMATION

For yearly maintenance, you do not have to remove the water filter from the unit to clean it. But in case of trouble with the water filter, you might have to remove it so that you can thoroughly clean it. Then you need to do as follows:

- "12.5.1 To remove the water filter" [▸ 156]
- "12.5.2 To clean the water filter in case of trouble" [▸ 156]
- "12.5.3 To install the water filter" [▸ 158]

Water pressure relief valve

Open the valve and check if it operates correctly. **The water may be very hot!**

Checkpoints are:

- The water flow coming from the relief valve is high enough, no blockage of the valve or in between piping is suspected.
- Dirty water coming out of the relief valve:
  - open the valve until the discharged water does NOT contain dirt anymore
  - flush the system

To make sure this water originates from the tank, check after a tank heat up cycle.

It is recommended to do this maintenance more frequently.

Pressure relief valve hose

Check whether the pressure relief valve hose is positioned appropriately to drain the water. See "6.4.4 To connect the drain hose to the drain" [▸ 51].

Pressure relief valve of the domestic hot water tank (field supply)

Open the valve.

CAUTION

Water coming out of the valve may be very hot.

- Check if nothing blocks the water in the valve or in between piping. The water flow coming from the relief valve must be high enough.
- Check if the water coming out of the relief valve is clean. If it contains debris or dirt:
  - Open the valve until the discharged water does not contain debris or dirt anymore.
  - Flush and clean the complete tank, including the piping between the relief valve and cold water inlet.

To make sure this water originates from the tank, check after a tank heat up cycle.

INFORMATION

It is recommended to perform this maintenance more than once a year.

Switch box

- Carry out a thorough visual inspection of the switch box and look for obvious defects such as loose connections or defective wiring.
- Using an ohmmeter, check if contactors K1M, K2M and K3M operate correctly. All contacts of these contactors must be in open position when the power is turned OFF.

WARNING

If the internal wiring is damaged, it has to be replaced by the manufacturer, its service agent or similarly qualified persons.

Descaling

Depending on water quality and set temperature, scale can deposit on the heat exchanger inside the domestic hot water tank and can restrict heat transfer. For this reason, descaling of the heat exchanger may be required at certain intervals.

Chemical disinfection

If the applicable legislation requires a chemical disinfection in specific situations, involving the domestic hot water tank, please be aware that the domestic hot water tank is a stainless steel cylinder. We recommend to use a non-chloride based disinfectant approved for use with water intended for human consumption.

NOTICE

When using means for descaling or chemical disinfection, it must be ensured that the water quality remains compliant with EU directive 98/83 EC.

12.4.1 To drain the domestic hot water tank

DANGER: RISK OF BURNING

The water in the tank can be very hot.

Prerequisite: Stop the unit operation via the user interface.

Prerequisite: Turn OFF the respective circuit breaker.

Prerequisite: Close the cold water supply.

Prerequisite: Open all the hot water tapping points to allow air to enter the system.

1. Remove the top panel, the upper front panel and the lower front panel.
2. Lower the switch box.
3. Remove the stop from the access point to the tank.
4. Use a drain hose and a pump to drain the tank via the access point.

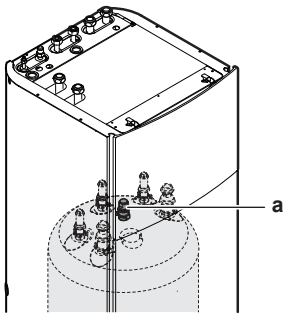

a Access point to tank

12.5 About cleaning the water filter in case of trouble

INFORMATION

For yearly maintenance, you do not have to remove the water filter from the unit to clean it. But in case of trouble with the water filter, you might have to remove it so that you can thoroughly clean it. Then you need to do as follows:

- "12.5.1 To remove the water filter" [▸ 156]
- "12.5.2 To clean the water filter in case of trouble" [▸ 156]
- "12.5.3 To install the water filter" [▸ 158]

12.5.1 To remove the water filter

Prerequisite: Stop the unit operation via the user interface.

Prerequisite: Turn OFF the respective circuit breaker.

1. The water filter is located behind the switch box. To get access to it, see:
   - "6.2.4 To open the indoor unit" [▸ 44]
   - "6.2.5 To lower the switch box on the indoor unit" [▸ 46]
2. Close the stop valves of the water circuit.
3. Close the valve (if equipped) of the water circuit towards the expansion vessel.
4. Remove the cap on the bottom of the magnetic filter/dirt separator.
5. Connect a drain hose to the bottom of the water filter.
6. Open the valve on the bottom of the water filter to drain water from the water circuit. Collect the drained water in a bottle, sink,... using the installed drain hose.
7. Remove the 2 clips that fix the water filter.

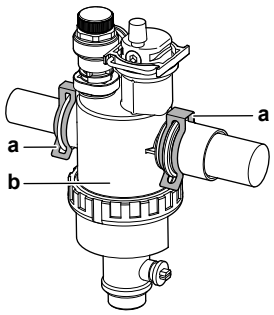

a Clip
b Magnetic filter/dirt separator

8. Remove the water filter.
9. Remove the drain hose from the water filter.

CAUTION

Although the water circuit is drained, some water may be spilled when removing the magnetic filter/dirt separator from the filter housing. ALWAYS clean up spilled water.

12.5.2 To clean the water filter in case of trouble

1. Remove the water filter from the unit. See "12.5.1 To remove the water filter" [▸ 156].

CAUTION

To protect the piping connected to the magnetic filter/dirt separator from damage it is recommended to perform this procedure with the magnetic filter/dirt separator removed from the unit.

2 Unscrew the bottom of the water filter housing. Use an appropriate tool if needed.

CAUTION

Opening the magnetic filter/dirt separator is ONLY required in case of severe issues. Preferably this action is never to be done during the complete lifetime of the magnetic filter/dirt separator.

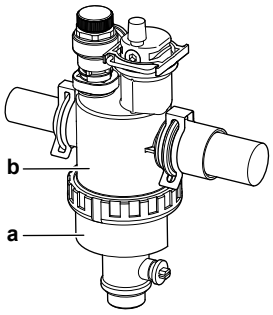

a Bottom part to be unscrewed
b Water filter housing

3 Remove the strainer and the rolled-up filter from the water filter housing and clean with water.

4 Install the cleaned rolled-up filter and strainer in the water filter housing.

INFORMATION

Correctly install the strainer in the magnetic filter/dirt separator housing using the protrusions.

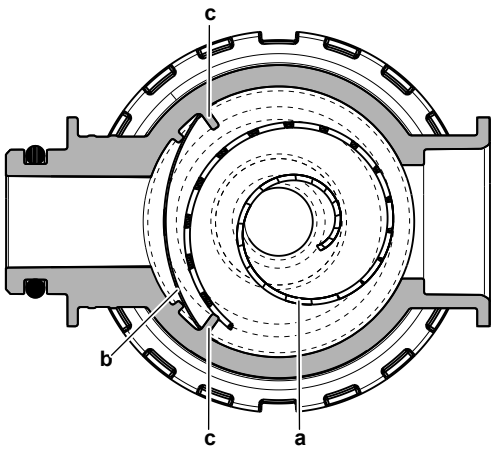

a Rolled-up filter
b Strainer
c Protrusion

5 Install and properly tighten the bottom of the water filter housing.

12.5.3 To install the water filter

CAUTION

Check the condition of the O-rings and replace if needed. Apply water to the O-rings before installation.

1 Install the water filter in the correct location.

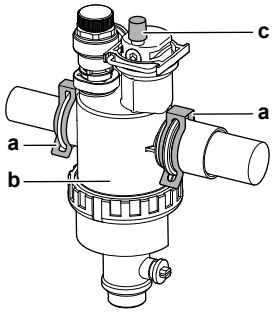

a Clip
b Magnetic filter/dirt separator
c Air purge valve

2 Install the 2 clips to fix the water filter to the water circuit pipes.

3 Make sure that the air purge valve of the water filter is in the open position.

4 Open the valve (if equipped) of the water circuit towards the expansion vessel.

CAUTION

Make sure to open the valve (if equipped) towards the expansion vessel, otherwise the overpressure will be generated.

5 Open the stop valves and add water to the water circuit if needed.

13 Troubleshooting

If a malfunction occurs, ⓘ is displayed on the home pages. You can press ⓘ to display more information about the malfunction.

For the symptoms listed below, you can try to solve the problem yourself. For any other problem, contact your installer. You can find the contact/helpdesk number via the user interface.

In this chapter

13.1 Overview: Troubleshooting 159
13.2 Precautions when troubleshooting 159
13.3 Solving problems based on symptoms 160
13.3.1 Symptom: The unit is NOT heating as expected 160
13.3.2 Symptom: The compressor does NOT start (space heating or domestic water heating) 161
13.3.3 Symptom: The system is making gurgling noises after commissioning 161
13.3.4 Symptom: The pump is blocked 162
13.3.5 Symptom: The pump is making noise (cavitation) 162
13.3.6 Symptom: The pressure relief valve opens 162
13.3.7 Symptom: The water pressure relief valve leaks 163
13.3.8 Symptom: The space is NOT sufficiently heated at low outdoor temperatures 164
13.3.9 Symptom: The pressure at the tapping point is temporarily unusually high 165
13.3.10 Symptom: Decoration panels are pushed away due to a swollen tank 165
13.3.11 Symptom: Tank disinfection function is NOT completed correctly (AH-error) 165
13.4 Solving problems based on error codes 165
13.4.1 Error codes: Overview 166

13.1 Overview: Troubleshooting

This chapter describes what you have to do in case of problems.

It contains information about:

- Solving problems based on symptoms
- Solving problems based on error codes

Before troubleshooting

Carry out a thorough visual inspection of the unit and look for obvious defects such as loose connections or defective wiring.

13.2 Precautions when troubleshooting

WARNING

- When carrying out an inspection on the switch box of the unit, ALWAYS make sure that the unit is disconnected from the mains. Turn off the respective circuit breaker.
- When a safety device was activated, stop the unit and find out why the safety device was activated before resetting it. NEVER shunt safety devices or change their values to a value other than the factory default setting. If you are unable to find the cause of the problem, call your dealer.

DANGER: RISK OF ELECTROCUTION

WARNING

Prevent hazards due to inadvertent resetting of the thermal cut-out: power to this appliance MUST NOT be supplied through an external switching device, such as a timer, or connected to a circuit that is regularly turned ON and OFF by the utility.

DANGER: RISK OF BURNING

13.3 Solving problems based on symptoms

13.3.1 Symptom: The unit is NOT heating as expected

Possible causes	Corrective action
The temperature setting is NOT correct	Check the temperature setting on the remote controller. Refer to the operation manual.
The water flow is too low	Check and make sure that: ▪ All shut-off valves of the water circuit are completely open. ▪ The water filter is clean. Clean if necessary. ▪ There is no air in the system. Purge air if necessary. You can purge air manually (see "To perform a manual air purge" [▸ 145]) or use the automatic air purge function (see "To perform an automatic air purge" [▸ 145]). ▪ The water pressure is >1 bar. ▪ The expansion vessel is NOT broken. ▪ The resistance in the water circuit is NOT too high for the pump (see "15 Technical data" [▸ 175] to find the ESP curve). If the problem persists after you have conducted all of the above checks, contact your dealer. In some cases, it is normal that the unit decides to use a low water flow.
The water volume in the installation is too low	Make sure that the water volume in the installation is above the minimum required value (see "7.2.3 To check the water volume and flow rate" [▸ 57]).

13.3.2 Symptom: The compressor does NOT start (space heating or domestic water heating)

Possible causes	Corrective action
The compressor cannot start if the water temperature is too low. The unit will use the backup heater to reach the minimum water temperature (12°C), after which the compressor can start.	If the backup heater doesn't start either, check and make sure that: ▪ The power supply to the backup heater is correctly wired. ▪ The backup heater thermal protector is NOT activated. ▪ The backup heater contactors are NOT broken. If the problem persists, contact your dealer.
The preferential kWh rate power supply settings and electrical connections do NOT match	This should match with the connections as explained in: ▪ "8.3.1 To connect the main power supply" [▶ 82] ▪ "8.1.5 About preferential kWh rate power supply" [▶ 78] ▪ "8.1.6 Overview of electrical connections except external actuators" [▶ 79]
The preferential kWh rate signal was sent by the electricity company	Wait for the power to return (maximum 2 hours).

13.3.3 Symptom: The system is making gurgling noises after commissioning

Possible cause	Corrective action
There is air in the system.	Purge air from the system.[a]
Various malfunctions.	Check if ⓘ is displayed on the home pages of the user interface. You can press ⓘ to display more information about the malfunction.

[a] We recommend to purge air with the air purge function of the unit (to be performed by the installer). If you purge air from the heat emitters or collectors, mind the following:

WARNING

Air purging heat emitters or collectors. Before you purge air from heat emitters or collectors, check if an error or ⓘ is displayed on the home pages of the user interface.

- If not, you can purge air immediately.
- If yes, make sure that the room where you want to purge air is sufficiently ventilated. **Reason:** Refrigerant might leak into the water circuit, and subsequently into the room when you purge air from the heat emitters or collectors.

13.3.4 Symptom: The pump is blocked

Possible causes	Corrective action
If the unit has been powered off for a long time, lime might block the rotor of the pump.	Use a Philips No. 2 screwdriver to push the deblocking screw of the rotor in (0.5 cm). Then turn the deblocking screw back and forth until the rotor is deblocked.[a] **Note:** Do NOT use excessive force. 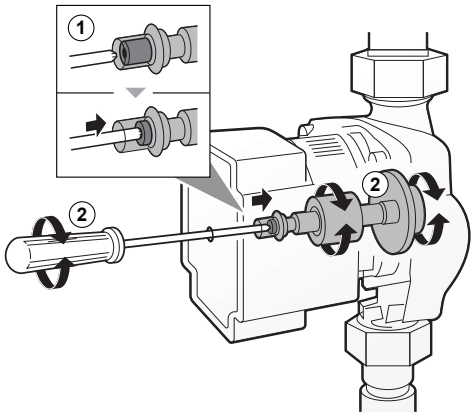

[a] If you cannot deblock the rotor of the pump with this method, you will need to disassemble the pump and turn the rotor by hand.

13.3.5 Symptom: The pump is making noise (cavitation)

Possible causes	Corrective action
There is air in the system	Purge air manually on both zones (see "To perform a manual air purge" [▸ 145]) or use the automatic air purge function on both zones (see "To perform an automatic air purge" [▸ 145]).
The water pressure at the pump inlet is too low	Check and make sure that: ▪ The water pressure is >1 bar. ▪ The water pressure sensor is not broken. ▪ The expansion vessel is NOT broken. ▪ The valve (if equipped) of the water circuit towards the expansion vessel is open. ▪ The pre-pressure setting of the expansion vessel is correct (see "7.2.4 Changing the pre-pressure of the expansion vessel" [▸ 59]).

13.3.6 Symptom: The pressure relief valve opens

Possible causes	Corrective action
The expansion vessel is broken	Replace the expansion vessel.

Possible causes	Corrective action
The valve (if equipped) of the water circuit towards the expansion vessel is closed.	Open the valve.
The water volume in the installation is too high	Make sure that the water volume in the installation is below the maximum allowed value (see "7.2.3 To check the water volume and flow rate" [▸ 57] and "7.2.4 Changing the pre-pressure of the expansion vessel" [▸ 59]).
The water circuit head is too high	The water circuit head is the difference in height between the indoor unit and the highest point of the water circuit. If the indoor unit is located at the highest point of the installation, the installation height is considered 0 m. The maximum water circuit head is 10 m. Check the installation requirements.

13.3.7 Symptom: The water pressure relief valve leaks

Possible causes	Corrective action
Dirt is blocking the water pressure relief valve outlet	Check whether the pressure relief valve works correctly by turning the red knob on the valve counterclockwise: ▪ If you do NOT hear a clacking sound, contact your dealer. ▪ If the water keeps running out of the unit, close both the water inlet and outlet shut-off valves first and then contact your dealer.

13.3.8 Symptom: The space is NOT sufficiently heated at low outdoor temperatures

Possible causes	Corrective action
The backup heater operation is not activated	Check and make sure that: ▪ The backup heater operation mode is enabled. Go to: - [A.5.1.1] > `Installer settings` > `Heat sources` > `Backup heater` > `Operation mode` [4-00] ▪ The backup heater overcurrent fuse has not been turned off. If it has, check the fuse and turn it back on. ▪ The thermal protector of the backup heater has not been activated. If it has, check the following, and then press the reset button in the switch box: - The water pressure - Whether there is air in the system - The air purge operation
The backup heater equilibrium temperature has not been configured correctly	Increase the "equilibrium temperature" to activate the backup heater operation at a higher outdoor temperature. Go to: ▪ [A.5.1.4] > `Installer settings` > `Heat sources` > `Backup heater` > `Equilibrium temp.` OR ▪ [A.8] > `Installer settings` > `Overview settings` [5-01]
There is air in the system.	Purge air manually or automatically. See the air purge function in the "Commissioning" chapter.
Too much heat pump capacity is used for heating domestic hot water	Check and make sure that the "space heating priority" settings have been configured appropriately: ▪ Make sure that the "space heating priority status" has been enabled. Go to [A.8] > `Installer settings` > `Overview settings` [5-02] ▪ Increase the "space heating priority temperature" to activate backup heater operation at a higher outdoor temperature. Go to [A.8] > `Installer settings` > `Overview settings` [5-03]

13.3.9 Symptom: The pressure at the tapping point is temporarily unusually high

Possible causes	Corrective action
Failing or blocked pressure relief valve.	▪ Flush and clean the complete tank including the piping between pressure relief valve and the cold water inlet. ▪ Replace the pressure relief valve.

13.3.10 Symptom: Decoration panels are pushed away due to a swollen tank

Possible causes	Corrective action
Failing or blocked pressure relief valve.	Contact your local dealer.

13.3.11 Symptom: Tank disinfection function is NOT completed correctly (AH-error)

Possible causes	Corrective action
The disinfection function was interrupted by domestic hot water tapping	Program the start-up of the disinfection function when the coming 4 hours NO domestic hot water tapping is expected.
Large domestic hot water tapping happened recently before the programmed start-up of the disinfection function	When the `Domestic hot water` > `Type` > `Reheat` or `Reheat + sched.` is selected, it is recommended to program the start-up of the disinfection function at least 4 hours later than the last expected large hot water tapping. This start-up can be set via the installer settings (disinfection function). When the `Domestic hot water` > `Type` > `Scheduled only` is selected, it is recommended to program a `Storage eco` 3 hours before the scheduled start-up of the disinfection function to preheat the tank.
The disinfection operation was stopped manually: with the user interface displaying the DHW home page and its user permission level set to `Installer`, the ⏻ button was pressed during disinfection operation.	Do NOT press the ⏻ button while the disinfection function is active.

13.4 Solving problems based on error codes

If the unit runs into a problem, the user interface displays an error code. It is important to understand the problem and to take measures before resetting an error code. This should be done by a licensed installer or by your local dealer.

This chapter gives you an overview of all possible error codes and their descriptions as they appear on the user interface.

For detailed troubleshooting of each error, see the service manual.

13.4.1 Error codes: Overview

Error codes of the unit

INFORMATION

In case of error code AH and no interruption of the disinfection function occurred due to domestic hot water tapping, following actions are recommended:

- When the `Reheat only` or `Schedule + reheat` mode is selected, it is recommended to program the start-up of the disinfection function at least 4 hours later than the last expected large hot water tapping. This start-up can be set by installer settings (disinfection function).
- When the `Schedule only` mode is selected, it is recommended to program an `Eco` action 3 hours before the scheduled start-up of the disinfection function to preheat the tank.

NOTICE

When the minimum water flow is lower than described in the table below, the unit will temporarily stop operation and the user interface will display error 7H-01. After some time, this error will reset automatically and the unit will resume operation.

INFORMATION

Error AJ-03 is reset automatically from the moment there is a normal tank heat-up.

INFORMATION

The user interface of the indoor unit will display how to reset an error code.

Error codes of the outdoor unit

Error code	Detailed error code	Description
A1	00	Zero cross detection problem. Power reset required. Please contact your dealer.
A5	00	OU: High pressure cooling/ Peak cut/ freeze protection problem.
E1	00	OU: PCB defect. Power reset required.
E3	00	OU: Actuation of high pressure switch (HPS). Please contact your dealer.
E5	00	OU: Overheat of inverter compressor motor. Please contact your dealer.

Error code	Detailed error code	Description
E6	00	OU: Compressor startup defect. Please contact your dealer.
E7	00	OU: Malfunction of outdoor unit fan motor. Please contact your dealer.
E8	00	OU: Power input overvoltage. Please contact your dealer.
EA	00	OU: Cool/heat switchover problem. Please contact your dealer.
H0	00	OU: Voltage/current sensor problem. Please contact your dealer.
H3	00	OU: Malfunction of high pressure switch (HPS) Please contact your dealer.
H6	00	OU: Malfunction of position detection sensor. Please contact your dealer.
H8	00	OU: Malfunction of compressor input (CT) system. Please contact your dealer.
H9	00	OU: Malfunction of outdoor air thermistor. Please contact your dealer.
F3	00	OU: Malfunction of discharge pipe temperature. Please contact your dealer.
F6	00	OU: Abnormal high pressure in cooling. Please contact your dealer.
FA	00	OU: Abnormal high pressure, actuation of HPS. Please contact your dealer.

Error code	Detailed error code	Description
JA	00	OU: Malfunction of high pressure sensor. Please contact your dealer.
J3	00	OU: Malfunction of discharge pipe thermistor. Please contact your dealer.
J6	00	OU: Malfunction of heat exchanger thermistor. Please contact your dealer.
J6	07	OU: Malfunction of heat exchanger thermistor. Please contact your dealer.
L3	00	OU: Electrical box temperature rise problem. Please contact your dealer.
L4	00	OU: Malfunction of inverter radiating fin temperature rise. Please contact your dealer.
L5	00	OU: Inverter instantaneous overcurrent (DC). Please contact your dealer.
P4	00	OU: Malfunction of radiating fin temperature sensor. Please contact your dealer.
U0	00	OU: Shortage of refrigerant. Please contact your dealer.
U2	00	OU: Defect of power supply voltage. Please contact your dealer.
U7	00	OU: Transmission malfunction between main CPU- INV CPU. Please contact your dealer.

Error codes of the indoor unit

Error code	Detailed error code	Description
7H	01	Water flow problem.
7H	04	Water flow problem during domestic hot water production. Manual reset. Check the domestic hot water circuit.
7H	05	Water flow problem during heating/ sampling. Manual reset. Check the space heating/cooling circuit.
7H	06	Water flow problem during cooling/ defrost. Manual reset. Check the plate heat exchanger.
7H	07	Water flow problem. Pump deblocking active
80	00	Returning water temperature sensor problem. Please contact your dealer.
81	00	Leaving water temperature sensor problem. Please contact your dealer.
81	01	Mixed water thermistor abnormality.
89	01	Heat exchanger frozen.
89	02	Heat exchanger frozen.
89	03	Heat exchanger frozen.
89	05	Heat exchanger frozen.

Error code	Detailed error code	Description
8F	00	Abnormal increase outlet water temperature (DHW).
8H	00	Abnormal increase outlet water temperature.
8H	01	Overheating mixed water circuit.
8H	02	Overheating mixed water circuit (thermostat)
8H	03	Overheating water circuit (thermostat).
AA	01	Backup heater overheated. Power reset required. Please contact your dealer.
AH	00	Tank disinfection function not completed correctly.
AJ	03	Too long DHW heat-up time required.
C0	00	Flow sensor/switch malfunction. Please contact your dealer.
C0	01	Flow sensor/switch malfunction. Please contact your dealer.
C0	02	Flow sensor/switch malfunction. Please contact your dealer.
C4	00	Heat exchanger temperature sensor problem. Please contact your dealer.
CJ	02	Room temperature sensor problem. Please contact your dealer.

Error code	Detailed error code	Description
EC	00	Abnormal increase tank temperature.
EC	04	Tank preheating
H1	00	External temperature sensor problem. Please contact your dealer.
HC	00	Tank temperature sensor problem. Please contact your dealer.
HC	01	Second tank temperature sensor problem. Please contact your dealer.
HJ	10	Water pressure sensor abnormality.
JA	17	Refrigerant pressure sensor abnormality.
U3	00	Under floor heating screed dryout function not completed correctly.
U4	00	Indoor/outdoor unit communication problem.
U5	00	User interface communication problem.
U8	01	Connection with adapter lost Please contact your dealer.
U8	02	Connection with room thermostat lost.
U8	03	No connection with room thermostat.
UA	00	Indoor unit, outdoor unit matching problem. Power reset required.
UA	16	Extension/hydro communication problem.
UA	21	Extension/hydro mismatch problem.

Error code	Detailed error code	Description
UA	22	Extension/hydro mismatch problem.

INFORMATION

Error AJ-03 is reset automatically from the moment there is a normal tank heat-up.

INFORMATION

If the unit detects flow when the pump is not running, an external device might be causing flow, or there might be something wrong with the flow measuring devices (flow sensor and flow switch).

- If the flow sensor detects flow when the pump is not running, the unit will stop operation and the user interface will display error C0-00. For the unit to resume operation, this error needs to be reset manually.
- If the flow switch detects flow when the pump is not running, the unit will temporarily stop operation and the user interface will display error C0-01. After some time, the error will reset automatically and the unit will resume operation. If the problem persists, the unit will stop operation and the user interface will display error C0-02. For the unit to resume operation, this error needs to be reset manually.

14 Disposal

NOTICE

Do NOT try to dismantle the system yourself: dismantling of the system, treatment of the refrigerant, oil and other parts MUST comply with applicable legislation. Units MUST be treated at a specialised treatment facility for reuse, recycling and recovery.

In this chapter

14.1 Overview: Disposal 173
14.2 To pump down 173

14.1 Overview: Disposal

Typical workflow

Disposing of the system typically consists of the following stages:

1 Pumping down the system.
2 Bringing the system to a specialized treatment facility.

INFORMATION

For more details, see the service manual.

14.2 To pump down

DANGER: RISK OF EXPLOSION

Pump down – Refrigerant leakage. If you want to pump down the system, and there is a leak in the refrigerant circuit:

- Do NOT use the unit's automatic pump down function, with which you can collect all refrigerant from the system into the outdoor unit. **Possible consequence:** Self-combustion and explosion of the compressor because of air going into the operating compressor.
- Use a separate recovery system so that the unit's compressor does NOT have to operate.

NOTICE

During pump down operation, stop the compressor before removing the refrigerant piping. If the compressor is still running and the stop valve is open during pump down, air will be sucked into the system. Compressor breakdown or damage to the system can result due to abnormal pressure in the refrigerant cycle.

Pump down operation will extract all refrigerant from the system into the outdoor unit (compressor module).

1 Remove the valve cap from the liquid stop valve and the gas stop valve.

2 On the user interface, start the pump down operation. Go to [A.6.E.1]: > `Installer settings` > `System operation` > `Pump down` > `Start pump down`.

3 After ±2 minutes, close the liquid stop valve with a hexagonal wrench.

4 Check on the manifold if the vacuum is reached.

5 After ±5 minutes, close the gas stop valve, and stop the pump down operation by pressing ⏻ on the user interface.

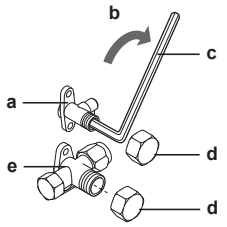

a Liquid stop valve
b Closing direction
c Hexagonal wrench
d Valve cap
e Gas stop valve

15 Technical data

A **subset** of the latest technical data is available on the regional Daikin website (publicly accessible). The **full set** of latest technical data is available on the Daikin Business Portal (authentication required).

In this chapter

15.1 Piping diagram: Outdoor unit 175
15.2 Piping diagram: Indoor unit 176
15.3 Wiring diagram: Outdoor unit 177
15.4 Wiring diagram: Indoor unit 179

15.1 Piping diagram: Outdoor unit

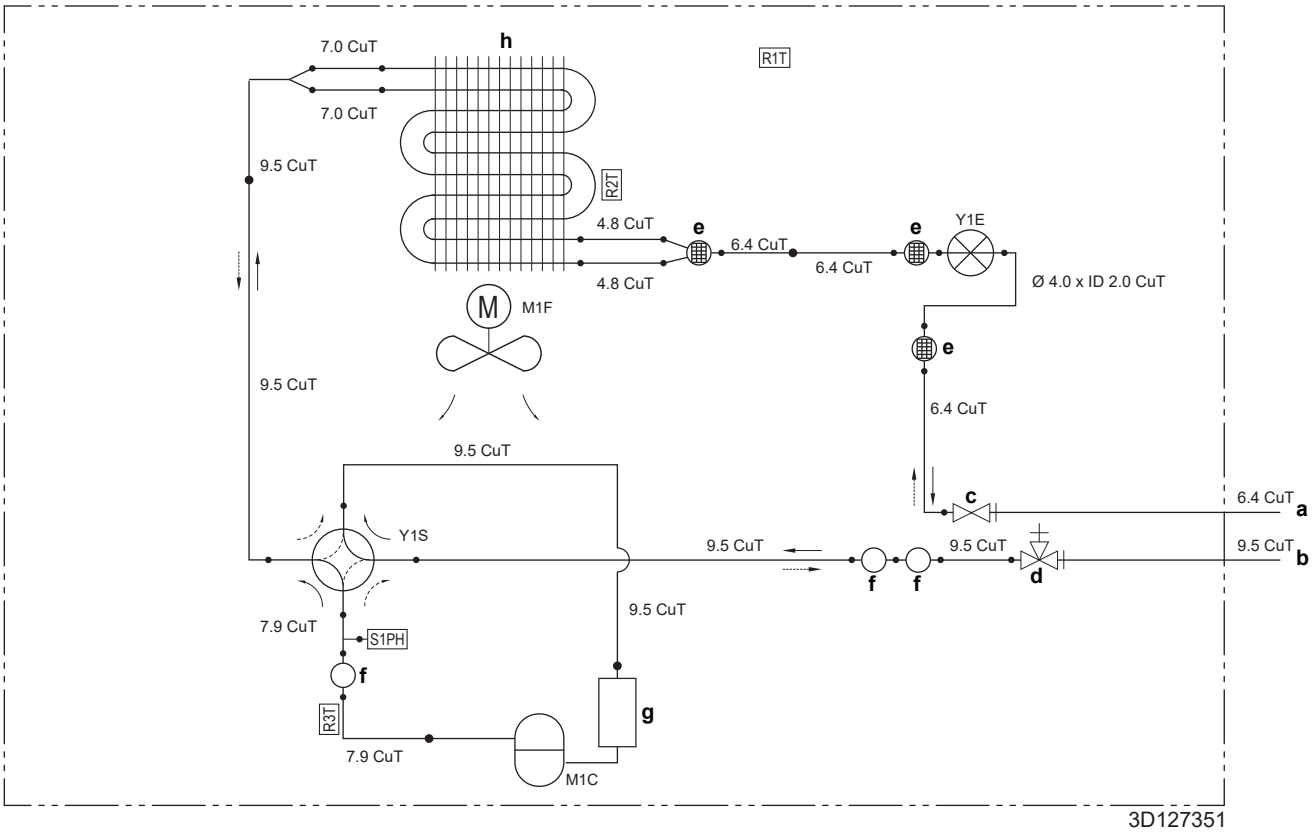

a	Field piping (liquid: Ø6.4 mm flare connection)
b	Field piping (gas: Ø9.5 mm flare connection)
c	Stop valve (liquid)
d	Stop valve with service port (gas)
e	Muffler with filter
f	Muffler
g	Accumulator
h	Heat exchanger
M1C	Compressor
M1F	Fan
R1T	Thermistor (outdoor air)
R2T	Thermistor (heat exchanger)
R3T	Thermistor (compressor discharge)
S1PH	High pressure switch (automatic reset)
Y1E	Electronic expansion valve
Y1S	Solenoid valve (4-way valve) (ON: cooling)
--►	Heating
—►	Cooling

15.2 Piping diagram: Indoor unit

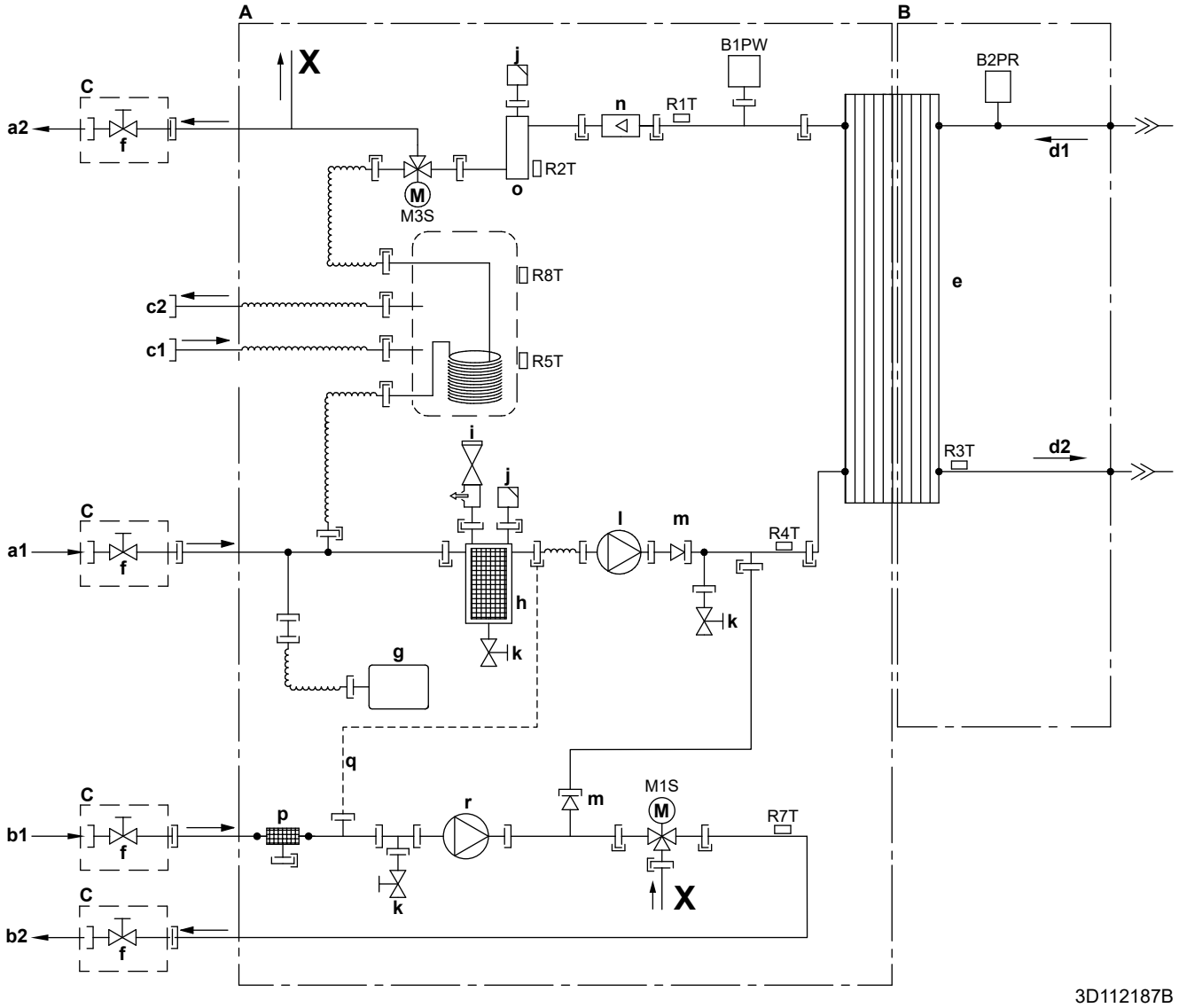

A	Water side
B	Refrigerant side
C	Field installed
a1	Space heating water IN (additional/direct zone)
a2	Space heating water OUT (additional/direct zone)
b1	Space heating water IN (main/mixed zone)
b2	Space heating water OUT (main/mixed zone)
c1	Domestic hot water: cold water IN
c2	Domestic hot water: hot water OUT
d1	Gas refrigerant IN (heating mode; condenser)
d2	Liquid refrigerant OUT (heating mode; condenser)
e	Plate heat exchanger
f	Shut-off valve for service (if equipped)
g	Expansion vessel
h	Magnetic filter/dirt separator
i	Safety valve
j	Air purge
k	Drain valve
l	Pump (additional zone/direct zone)
m	Check valve
n	Flow sensor
o	Backup heater
p	Water filter (main/mixed zone)
q	Capillary tube
r	Pump (main/mixed zone)

B1PW	Space heating water pressure sensor
B2PR	Refrigerant pressure sensor
M1S	3-way valve (mixing valve for the main zone/mixed zone))
M3S	3-way valve (space heating/domestic hot water)
R1T	Thermistor (heat exchanger – water OUT)
R2T	Thermistor (backup heater – water OUT)
R3T	Thermistor (liquid refrigerant)
R4T	Thermistor (heat exchanger – water IN)
R5T, R8T	Thermistor (tank)
R7T	Thermistor (main/mixed zone – water OUT)
	Screw connection
	Flare connection
	Quick coupling
	Brazed connection

15.3 Wiring diagram: Outdoor unit

See the internal wiring diagram supplied with the unit (on the inside of the top plate). The abbreviations used are listed below.

(1) Wiring diagram

English	Translation
Wiring diagram	Wiring diagram
For the power requirements, refer to the nameplate.	For the power requirements, refer to the nameplate.
Field wiring	Field wiring
Indoor	Indoor
Outdoor	Outdoor
Condenser	Condenser
Discharge	Discharge

(2) Notes

1 Size: 140×80

2 Refer to purchasing specification AS303002, unless otherwise specified.

(3) Legend

L	Live
N	Neutral
⏚	Protective earth
⏚	Earth
	Field wiring
	Circuit breaker
	Connection
	Terminal strip
	Connector
	Terminal
BLK	Black
WHT	White
BRN	Brown
RED	Red
GRN	Green
YLW	Yellow
ORG	Orange
BLU	Blue
GRY	Grey
A1P	Printed circuit board

C7	Capacitor
DB1	Diode bridge
E*	Connector
FU1, FU2	Fuse T 3.15 A 250 V
F4U	Fuse T 30 A 250 V
H*	Connector
IPM*	Intelligent power module
M1C	Compressor motor
M1F	Fan motor
MR4, MR30	Magnetic relay
MRM10, MRM20	Magnetic relay
PAM	Pulse-amplitude modulation
PS	Switching power supply
Q1L	Overload protector
R1T	Thermistor (outdoor air)
R2T	Thermistor (heat exchanger)
R3T	Thermistor (compressor discharge)
S1PH	High pressure switch
S*	Connector
SA1	Surge arrestor
U, V, W	Connector
V2, V3, V150	Varistor
X11A	Connector
X1M	Terminal strip
Y1E	Electronic expansion valve coil
Y1S	Reversing solenoid valve coil
Z*C	Noise filter (ferrite core)
Z1F	Noise filter

15.4 Wiring diagram: Indoor unit

See the internal wiring diagram supplied with the unit (on the inside of the indoor unit switch box cover). The abbreviations used are listed below.

Notes to go through before starting the unit

English	Translation
Notes to go through before starting the unit	Notes to go through before starting the unit
X1M	Main terminal
X2M	Field wiring terminal for AC
X5M	Field wiring terminal for DC
X6M	Backup heater power supply terminal
—·—·—·	Earth wiring
– – – – – – –	Field supply
①	Several wiring possibilities
	Option
	Not mounted in switch box
	Wiring depending on model
	PCB
Note 1: Connection point of the power supply for the BUH should be foreseen outside the unit.	Note 1: Connection point of the power supply for the backup heater should be foreseen outside the unit.
Backup heater power supply	Backup heater power supply
☐ 1N~, 230 V	☐ 1N~, 230 V
User installed options	User installed options
☐ LAN adapter	☐ LAN adapter
☐ Remote user interface	☐ User interface used as room thermostat
☐ Ext. indoor thermistor	☐ External indoor thermistor
☐ Ext outdoor thermistor	☐ External outdoor thermistor
☐ Digital I/O PCB	☐ Digital I/O PCB
☐ Demand PCB	☐ Demand PCB
Main LWT	Main leaving water temperature
☐ On/OFF thermostat (wired)	☐ On/OFF thermostat (wired)
☐ On/OFF thermostat (wireless)	☐ On/OFF thermostat (wireless)
☐ Ext. thermistor	☐ External thermistor
☐ Heat pump convector	☐ Heat pump convector
☐ Safety thermostat	☐ Safety thermostat
Add LWT	Additional leaving water temperature
☐ On/OFF thermostat (wired)	☐ On/OFF thermostat (wired)

English	Translation
☐ On/OFF thermostat (wireless)	☐ On/OFF thermostat (wireless)
☐ Ext. thermistor	☐ External thermistor
☐ Heat pump convector	☐ Heat pump convector

Position in switch box

English	Translation
Position in switch box	Position in switch box

Legend

A1P		Main PCB
A2P	*	On/OFF thermostat (PC=power circuit)
A3P	*	Heat pump convector
A4P	*	Digital I/O PCB
A5P		Bizone PCB
A6P		Current loop PCB
A8P	*	Demand PCB
A10P		EKRUDAL1 (user interface connected to the indoor unit)
A13P	*	LAN adapter
A14P	*	User interface PCB
A15P	*	Receiver PCB (wireless On/OFF thermostat)
B1L		Flow sensor
B1PR		Refrigerant pressure sensor
B1PW		Water pressure sensor
CN* (A4P)	*	Connector
DS1 (A5P)		DIP switch
DS1(A8P)	*	DIP switch
E1H		Backup heater element (3 kW)
F1B	#	Overcurrent fuse backup heater
F1T		Thermal fuse backup heater
F1U, F2U (A4P)	*	Fuse 5 A 250 V for digital I/O PCB
F1U, F2U (A5P)		Fuse T 3.15 A 250 V for PCB
FU1 (A1P)		Fuse T 5 A 250 V for PCB
K1M		Contactor backup heater
K5M		Safety contactor backup heater
K6M		Relay 3-way valve bypass
K7M		Relay 3-way valve flow
K*R (A1P, A4P)		Relay on PCB
M1P		Additional zone pump

M1S		Mixing 3-way valve
M2P	#	Domestic hot water pump
M3P		Main zone pump
M3S		3-way valve for space heating/domestic hot water
PC (A15P)	*	Power circuit
PHC1 (A4P)	*	Optocoupler input circuit
Q1L		Thermal protector backup heater
Q3L, Q4L	#	Safety thermostat
Q*DI	#	Earth leakage circuit breaker
R1H (A2P)	*	Humidity sensor
R1T (A1P)		Outlet water heat exchanger thermistor
R1T (A2P)	*	Ambient sensor On/OFF thermostat
R1T (A14P)	*	Ambient sensor user interface
R2T (A1P)		Outlet backup heater thermistor
R2T (A2P)	*	External sensor (floor or ambient)
R3T		Refrigerant liquid side thermistor
R4T		Inlet water thermistor
R5T, R8T		Domestic hot water thermistor
R6T	*	External indoor or outdoor ambient thermistor
R7T		Mixed leaving water thermistor
S1S	#	Preferential kWh rate power supply contact
S2S	#	Electrical meter pulse input 1
S3S	#	Electrical meter pulse input 2
S6S~S9S	*	Digital power limitation inputs
SS1 (A4P)	*	Selector switch
TR1		Power supply transformer
X6M	#	Backup heater power supply terminal strip
X*, X*A, X*H*, X*Y		Connector
X*M		Terminal strip

* Optional

\# Field supply

Translation of text on wiring diagram

English	Translation
(1) Main power connection	(1) Main power connection
For preferential kWh rate power supply	For preferential kWh rate power supply
Indoor unit supplied from outdoor	Indoor unit supplied from outdoor
Normal kWh rate power supply	Normal kWh rate power supply

English	Translation
Only for normal power supply (standard)	Only for normal power supply (standard)
Only for preferential kWh rate power supply (outdoor)	Only for preferential kWh rate power supply (outdoor)
Outdoor unit	Outdoor unit
Preferential kWh rate power supply contact: 16 V DC detection (voltage supplied by PCB)	Preferential kWh rate power supply contact: 16 V DC detection (voltage supplied by PCB)
SWB	Switch box
Use normal kWh rate power supply for indoor unit	Use normal kWh rate power supply for indoor unit
(2) Backup heater power supply	(2) Backup heater power supply
Only for ***	Only for ***
(3) User interface	(3) User interface
Only for LAN adapter	Only for the LAN adapter
Only for remote user interface	Only for the remote user interface
(5) Ext. thermistor	(5) External thermistor
SWB	Switch box
(6) Field supplied options	(6) Field supplied options
12 V DC pulse detection (voltage supplied by PCB)	12 V DC pulse detection (voltage supplied by PCB)
230 V AC supplied by PCB	230 V AC supplied by PCB
Continuous	Continuous current
DHW pump output	Domestic hot water pump output
DHW pump	Domestic hot water pump
Electrical meters	Electrical meters
For safety thermostat	For safety thermostat
Inrush	Inrush current
Max. load	Maximum load
Normally closed	Normally closed
Normally open	Normally open
Safety thermostat	Safety thermostat
Safety thermostat contact: 16 V DC detection (voltage supplied by PCB)	Safety thermostat contact: 16 V DC detection (voltage supplied by PCB)
Shut-off valve	Shut-off valve
SWB	Switch box
(7) Option PCBs	(7) Option PCBs
Alarm output	Alarm output
Changeover to ext. heat source	Changeover to external heat source

English	Translation
Max. load	Maximum load
Min. load	Minimum load
Only for demand PCB option	Only for demand PCB option
Only for digital I/O PCB option	Only for digital I/O PCB option
Options: ext. heat source output, alarm output	Options: external heat source output, alarm output
Options: On/OFF output	Options: On/OFF output
Power limitation digital inputs: 12 V DC / 12 mA detection (voltage supplied by PCB)	Power limitation digital inputs: 12 V DC / 12 mA detection (voltage supplied by PCB)
Space heating On/OFF output	Space heating On/OFF output
SWB	Switch box
(8) External On/OFF thermostats and heat pump convector	(8) External On/OFF thermostats and heat pump convector
Additional LWT zone	Additional leaving water temperature zone
Main LWT zone	Main leaving water temperature zone
Only for external sensor (floor/ambient)	Only for external sensor (floor or ambient)
Only for heat pump convector	Only for heat pump convector
Only for wired On/OFF thermostat	Only for wired On/OFF thermostat
Only for wireless On/OFF thermostat	Only for wireless On/OFF thermostat

Electrical connection diagram

For more details, please check the unit wiring.

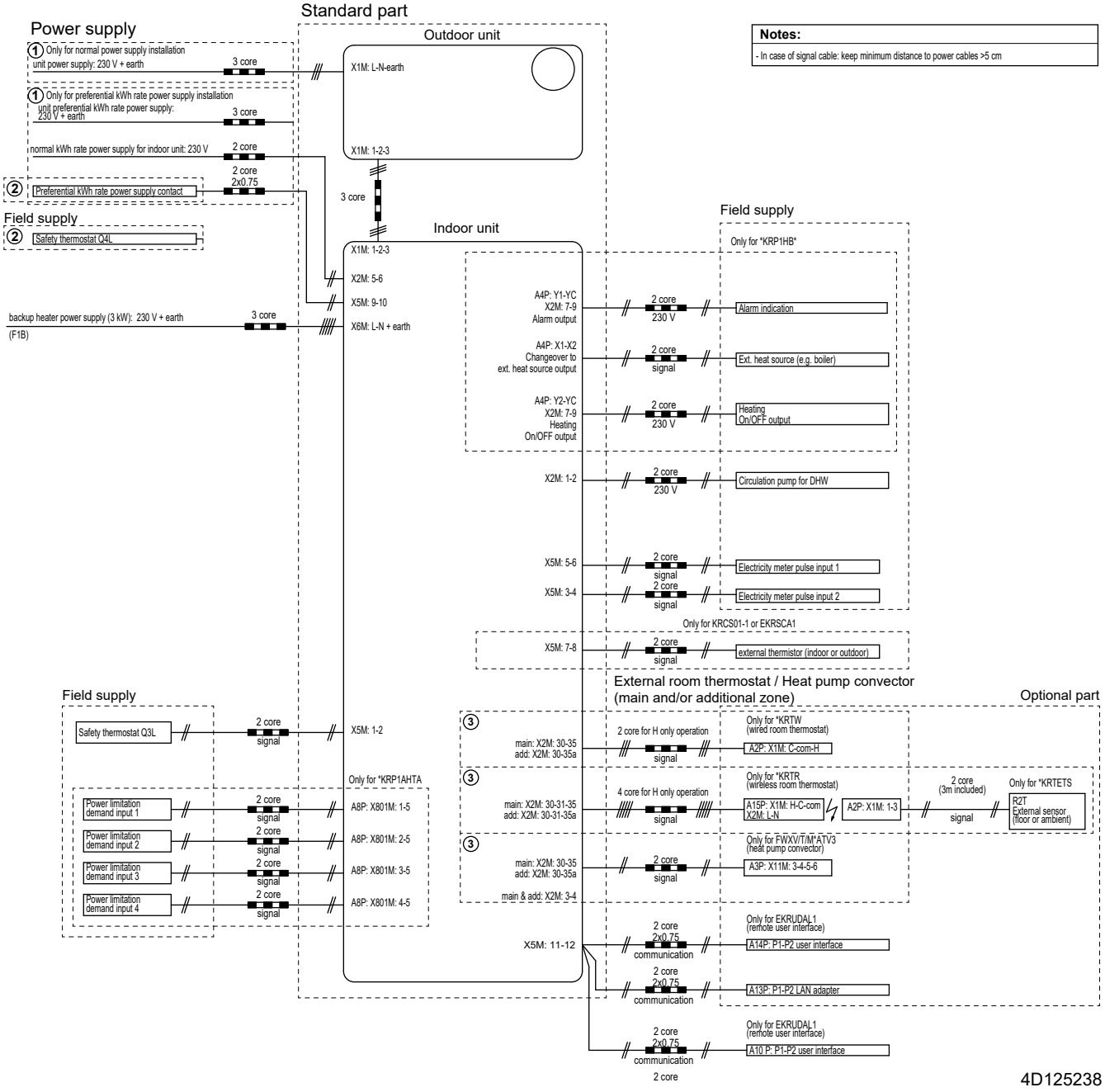

16 Glossary

Dealer
Sales distributor for the product.

Authorised installer
Technical skilled person who is qualified to install the product.

User
Person who is owner of the product and/or operates the product.

Applicable legislation
All international, European, national and local directives, laws, regulations and/or codes that are relevant and applicable for a certain product or domain.

Service company
Qualified company which can perform or coordinate the required service to the product.

Installation manual
Instruction manual specified for a certain product or application, explaining how to install, configure and maintain it.

Operation manual
Instruction manual specified for a certain product or application, explaining how to operate it.

Maintenance instructions
Instruction manual specified for a certain product or application, which explains (if relevant) how to install, configure, operate and/or maintain the product or application.

Accessories
Labels, manuals, information sheets and equipment that are delivered with the product and that need to be installed according to the instructions in the accompanying documentation.

Optional equipment
Equipment made or approved by Daikin that can be combined with the product according to the instructions in the accompanying documentation.

Field supply
Equipment NOT made by Daikin that can be combined with the product according to the instructions in the accompanying documentation.

Field settings table

[6.8.2] = ... **ID9E51**

Applicable units

EHFZ03S18DJ3V

Notes

—

Field settings table

Breadcrumb	Field code	Setting name			Range, step **Default value**	Installer setting at variance with default value Date	Value
User settings							
└ Preset values							
└ Room temperature							
7.4.1.1		Comfort (heating)		R/W	[3-07]~[3-06], step: A.3.2.4 **22°C**		
7.4.1.2		Eco (heating)		R/W	[3-07]~[3-06], step: A.3.2.4 **18°C**		
7.4.1.3		Comfort (*)		R/W	[3-09]~[3-08], step: A.3.2.4 **24°C**		
7.4.1.4		Eco (*)		R/W	[3-09]~[3-08], step: A.3.2.4 **28°C**		
└ LWT main							
7.4.2.1	[8-09]	Comfort (heating)		R/W	[9-01]~[9-00], step: 1°C **35°C**		
7.4.2.2	[8-0A]	Eco (heating)		R/W	[9-01]~[9-00], step: 1°C **33°C**		
7.4.2.3	[8-07]	Comfort (*)		R/W	[9-03]~[9-02], step: 1°C **18°C**		
7.4.2.4	[8-08]	Eco (*)		R/W	[9-03]~[9-02], step: 1°C **20°C**		
└ Tank temperature							
7.4.3.1	[6-0A]	Storage comfort		R/W	30~[6-0E]°C, step: 1°C **60°C**		
7.4.3.2	[6-0B]	Storage eco		R/W	30~min(50, [6-0E])°C, step: 1°C **50°C**		
7.4.3.3	[6-0C]	Reheat		R/W	30~min(50, [6-0E])°C, step: 1°C **45°C**		
└ Quiet level							
7.4.4				R/W	**1: Level 1** 2: Level 2 3: Level 3		
└ Set weather dependent							
└ Main							
└ Set weather-dependent heating							
7.7.1.1	[1-00]	Set weather-dependent heating	Low ambient temp. for LWT main zone heating WD curve.	R/W	-40~5°C, step: 1°C **-10°C**		
7.7.1.1	[1-01]	Set weather-dependent heating	High ambient temp. for LWT main zone heating WD curve.	R/W	10~25°C, step: 1°C **15°C**		
7.7.1.1	[1-02]	Set weather-dependent heating	Leaving water value for low ambient temp. for LWT main zone heating WD curve.	R/W	[9-01]~[9-00], step: 1°C **35°C**		
7.7.1.1	[1-03]	Set weather-dependent heating	Leaving water value for high ambient temp. for LWT main zone heating WD curve.	R/W	[9-01]~min(45, [9-00])°C , step: 1°C **25°C**		
└ Set weather-dependent Cooling							
7.7.1.2	[1-06]	Set weather-dependent Cooling (*)	'Low ambient temp. for LWT main zone cooling WD curve.	R/W	10~25°C, step: 1°C **20°C**		
7.7.1.2	[1-07]	Set weather-dependent Cooling (*)	High ambient temp. for LWT main zone cooling WD curve.	R/W	25~43°C, step: 1°C **35°C**		
7.7.1.2	[1-08]	Set weather-dependent Cooling (*)	'Leaving water value for low ambient temp. for LWT main zone cooling WD curve.	R/W	[9-03]~[9-02]°C, step: 1°C **22°C**		
7.7.1.2	[1-09]	Set weather-dependent Cooling (*)	'Leaving water value for high ambient temp. for LWT main zone cooling WD curve.	R/W	[9-03]~[9-02]°C, step: 1°C **18°C**		
└ Additional							
└ Set weather-dependent heating							
7.7.2.1	[0-03]	Set weather-dependent heating	Low ambient temp. for LWT add zone heating WD curve.	R/W	-40~5°C, step: 1°C **-10°C**		
7.7.2.1	[0-02]	Set weather-dependent heating	High ambient temp. for LWT add zone heating WD curve.	R/W	10~25°C, step: 1°C **15°C**		
7.7.2.1	[0-01]	Set weather-dependent heating	Leaving water value for low ambient temp. for LWT add zone heating WD curve.	R/W	[9-05]~[9-06]°C, step: 1°C **50°C**		
7.7.2.1	[0-00]	Set weather-dependent heating	Leaving water value for high ambient temp. for LWT add zone heating WD curve.	R/W	[9-05]~min(45,[9-06])°C, step: 1°C **35°C**		
└ Set weather-dependent Cooling							
7.7.2.2	[0-07]	Set weather-dependent Cooling (*)	Low ambient temp. for LWT add zone cooling WD curve.	R/W	10~25°C, step: 1°C **20°C**		
7.7.2.2	[0-06]	Set weather-dependent Cooling (*)	High ambient temp. for LWT add zone cooling WD curve.	R/W	25~43°C, step: 1°C **35°C**		
7.7.2.2	[0-05]	Set weather-dependent Cooling (*)	Leaving water value for low ambient temp. for LWT add zone cooling WD curve.	R/W	[9-07]~[9-08]°C, step: 1°C **12°C**		
7.7.2.2	[0-04]	Set weather-dependent Cooling (*)	Leaving water value for high ambient temp. for LWT add zone cooling WD curve.	R/W	[9-07]~[9-08]°C, step: 1°C **8°C**		
Installer settings							
└ System layout							
└ Standard							
A.2.1.1	[E-00]	Unit type		R/O	0~5 **0: LT split**		
A.2.1.2	[E-01]	Compressor type		R/O	**0**		
A.2.1.3	[E-02]	Indoor software type		R/O	**1**		
A.2.1.7	[C-07]	Unit control method		R/W	**0: LWT control** 1: Ext RT control 2: RT control		
A.2.1.9	[F-0D]	Pump operation mode		R/W	0: Continuous **1: Sample** 2: Request		
A.2.1.A	[E-04]	Power saving possible		R/O	**1: Yes**		
A.2.1.B		User interface location		R/W	0: At unit **1: In room**		
└ Options							
A.2.2.1	[E-05]	DHW operation		R/O	0~1 1. Yes		
A.2.2.3	[E-07]	DHW tank type		R/O	0~6 1: Integrated		
A.2.2.4	[C-05]	Thermostat Type		R/W	0: - 1: 1 contact **2: 2 contacts**		
A.2.2.A	[D-02]	Which type of DHW pump is installed?		R/W	**0: No** 1: Secondary rtrn 2: Disinf. Shunt		
A.2.2.B	[C-08]	External sensor		R/W	**0: No** 1: Outdoor sensor 2: Room sensor		
A.2.2.G		LAN Adapter		R/W	**0: No** 1: Yes		
└ Space operation							
└ LWT settings							
└ Main							

(*) Setting is not applicable for this unit

Field settings table

Breadcrumb	Field code	Setting name			Range, step **Default value**	Installer setting at variance with default value Date	 Value
A.3.1.1.1		LWT setpoint mode		R/W	**0: Fixed** 1: Weather dep. 2: Fixed / scheduled 3: WD / scheduled		
A.3.1.1.2.1	[9-01]	Temperature range	Minimum temp (heating)	R/W	15~37°C, step: 1°C **25°C**		
A.3.1.1.2.2	[9-00]	Temperature range	Maximum temp (heating)	R/W	37~60°C, step: 1°C **55°C**		
A.3.1.1.2.3	[9-03]	Temperature range	Minimum temp (*)	R/W	5~18°C, step: 1°C **5°C**		
A.3.1.1.2.4	[9-02]	Temperature range	Maximum temp (*)	R/W	18~22°C, step: 1°C **22°C**		
A.3.1.1.5	[8-05]	Modulated LWT		R/W	**0: No** 1: Yes		
A.3.1.1.7	[2-0C]	Emitter type		R/W	**0: Underfloor heating** 1: Fancoil unit 2: Radiator		
		└ Additional					
A.3.1.2.1		LWT setpoint mode		R/W	**0: Fixed** 1: Weather dep. 2: Fixed / scheduled 3: WD / scheduled		
A.3.1.2.2.1	[9-05]	Temperature range	Minimum temp (heating)	R/W	15~37°C, step: 1°C **25°C**		
A.3.1.2.2.2	[9-06]	Temperature range	Maximum temp (heating)	R/W	37~60°C, step: 1°C **55°C**		
A.3.1.2.2.3	[9-07]	Temperature range	Minimum temp (*)	R/W	5~18°C, step: 1°C **5°C**		
A.3.1.2.2.4	[9-08]	Temperature range	Maximum temp (*)	R/W	18~22°C, step: 1°C **22°C**		
		└ Delta T source					
A.3.1.3.1	[1-0B]	Delta T heating		R/W	3~10°C, step: 1°C **5°C**		
A.3.1.3.2	[1-0D]	Delta T cooling (*)		R/W	3~10°C, step: 1°C **5°C**		
		└ Room thermostat					
A.3.2.1.1	[3-07]	Room temp. range	Minimum temp (heating)	R/W	12~18°C, step: A.3.2.4 **12°C**		
A.3.2.1.2	[3-06]	Room temp. range	Maximum temp (heating)	R/W	18~30°C, step: A.3.2.4 **30°C**		
A.3.2.1.3	[3-09]	Room temp. range	Minimum temp (*)	R/W	15~25°C, step: A.3.2.4 **15°C**		
A.3.2.1.4	[3-08]	Room temp. range	Maximum temp (*)	R/W	25~35°C, step: A.3.2.4 **35°C**		
A.3.2.2	[2-0A]	Room temp. offset		R/W	-5~5°C, step: 0,5°C **0°C**		
A.3.2.4		Room temp. step		R/W	**0: 1°C** 1: 0,5°C		
		└ Operation range					
A.3.3.1	[4-02]	Space heating OFF temp		R/W	14~35°C, step: 1°C **22°C**		
A.3.3.2	[F-01]	Space Cooling ON temp (*)		R/W	10~35°C, step: 1°C **20°C**		
└ Domestic hot water (DHW)							
		└ Type					
A.4.1	[6-0D]			R/W	0: Reheat only **1: Reheat + sched.** 2: Scheduled only		
		└ Disinfection					
A.4.4.1	[2-01]	Disinfection		R/W	**0: No** 1: Yes		
A.4.4.2	[2-00]	Operation day		R/W	0: Each day 1: Monday 2: Tuesday 3: Wednesday 4: Thursday **5: Friday** 6: Saturday 7: Sunday		
A.4.4.3	[2-02]	Start time		R/W	0~23 hour, step: 1 hour **1**		
A.4.4.4	[2-03]	Temperature target		R/W	fixed value **60°C**		
A.4.4.5	[2-04]	Duration		R/W	40~60 min, step: 5 min **40 min**		
		└ Maximum setpoint					
A.4.5	[6-0E]			R/W	40~60°C, step: 1°C **60°C**		
		└ SP mode					
A.4.6				R/W	**0: Fixed** 1: Weather dep.		
		└ Weather dependent curve					
A.4.7	[0-0B]	Weather-dependent curve	DHW setpoint for high ambient temp. for DHW WD curve.	R/W	35~[6-0E]°C, step: 1°C **55°C**		
A.4.7	[0-0C]	Weather-dependent curve	DHW setpoint for low ambient temp. for DHW WD curve.	R/W	45~[6-0E]°C, step: 1°C **60°C**		
A.4.7	[0-0D]	Weather-dependent curve	High ambient temp. for DHW WD curve.	R/W	10~25°C, step: 1°C **15°C**		
A.4.7	[0-0E]	Weather-dependent curve	Low ambient temp. for DHW WD curve.	R/W	-40~5°C, step: 1°C **-10°C**		
└ Heat sources							
		└ Backup heater					
A.5.1.4	[5-01]	Equilibrium temp.		R/W	-15~35°C, step: 1°C **0°C**		
A.5.1.5	[8-0E]	BUH only ambient temp.		R/W	-15~-7°C, step: 1°C **-7°C**		
└ System operation							
		└ Auto restart					
A.6.1	[3-00]			R/W	0: No **1: Yes**		
		└ Pwr consumpt. Control					
A.6.3.1	[4-08]	Mode		R/W	**0: No limitation** 1: Continuous 2: Digital inputs		
A.6.3.2	[4-09]	Type		R/W	0: Current **1: Power**		
A.6.3.3	[5-05]	Amp. value		R/W	0~50 A, step: 1 A **50 A**		

(*) Setting is not applicable for this unit

Field settings table

Breadcrumb	Field code	Setting name		Range, step **Default value**	Installer setting at variance with default value Date	Value
A.6.3.4	[5-09]	kW value	R/W	0~20 kW, step: 0,5 kW **20 kW**		
	└ Averaging time					
A.6.4	[1-0A]		R/W	**0: No averaging** 1: 12 hours 2: 24 hours 3: 48 hours 4: 72 hours		
	└ Ext amb. sensor offset					
A.6.5	[2-0B]		R/W	-5~5°C, step: 0,5°C **0°C**		
	└ Emergency					
A.6.C			R/W	**0: Manual** 1: Automatic		
	└ Disable protective Function					
A.6.D		Disable protections	R/W	**0: No** 1: Yes		
└ Overview settings						
A.8	[0-00]	Leaving water value for high ambient temp. for LWT add zone heating WD curve.	R/W	[9-05]~min(45,[9-06])°C, step: 1°C **35°C**		
A.8	[0-01]	Leaving water value for low ambient temp. for LWT add zone heating WD curve.	R/W	[9-05]~[9-06]°C, step: 1°C **50°C**		
A.8	[0-02]	High ambient temp. for LWT add zone heating WD curve.	R/W	10~25°C, step: 1°C **15°C**		
A.8	[0-03]	Low ambient temp. for LWT add zone heating WD curve.	R/W	-40~5°C, step: 1°C **-10°C**		
A.8	[0-04]	Leaving water value for high ambient temp. for LWT add zone cooling WD curve. (*)	R/W	[9-07]~[9-08]°C, step: 1°C **8°C**		
A.8	[0-05]	Leaving water value for low ambient temp. for LWT add zone cooling WD curve. (*)	R/W	[9-07]~[9-08]°C, step: 1°C **12°C**		
A.8	[0-06]	High ambient temp. for LWT add zone cooling WD curve. (*)	R/W	25~43°C, step: 1°C **35°C**		
A.8	[0-07]	Low ambient temp. for LWT add zone cooling WD curve. (*)	R/W	10~25°C, step: 1°C **20°C**		
A.8	[0-0B]	Leaving water value for high ambient temp. for DHW WD curve.	R/W	35~[6-0E]°C, step: 1°C **55°C**		
A.8	[0-0C]	Leaving water value for low ambient temp. for DHW WD curve.	R/W	45~[6-0E]°C, step: 1°C **60°C**		
A.8	[0-0D]	High ambient temp. for DHW WD curve.	R/W	10~25°C, step: 1°C **15°C**		
A.8	[0-0E]	Low ambient temp. for DHW WD curve.	R/W	-40~5°C, step: 1°C **-10°C**		
A.8	[1-00]	Low ambient temp. for LWT main zone heating WD curve.	R/W	-40~5°C, step: 1°C **-10°C**		
A.8	[1-01]	High ambient temp. for LWT main zone heating WD curve.	R/W	10~25°C, step: 1°C **15°C**		
A.8	[1-02]	Leaving water value for low ambient temp. for LWT main zone heating WD curve.	R/W	[9-01]~[9-00], step: 1°C **35°C**		
A.8	[1-03]	Leaving water value for high ambient temp. for LWT main zone heating WD curve.	R/W	[9-01]~min(45, [9-00])°C , step: 1°C **25°C**		
A.8	[1-04]	Weather dependent cooling of the main leaving water temperature zone. (*)	R/W	0: Disabled **1: Enabled**		
A.8	[1-05]	Weather dependent cooling of the additional leaving water temperature zone (*)	R/W	0: Disabled **1: Enabled**		
A.8	[1-06]	Low ambient temp. for LWT main zone cooling WD curve. (*)	R/W	10~25°C, step: 1°C **20°C**		
A.8	[1-07]	High ambient temp. for LWT main zone cooling WD curve. (*)	R/W	25~43°C, step: 1°C **35°C**		
A.8	[1-08]	Leaving water value for low ambient temp. for LWT main zone cooling WD curve. (*)	R/W	[9-03]~[9-02]°C, step: 1°C **22°C**		
A.8	[1-09]	Leaving water value for high ambient temp. for LWT main zone cooling WD curve. (*)	R/W	[9-03]~[9-02]°C, step: 1°C **18°C**		
A.8	[1-0A]	What is the averaging time for the outdoor temp?	R/W	**0: No averaging** 1: 12 hours 2: 24 hours 3: 48 hours 4: 72 hours		
A.8	[1-0B]	What is target delta T in heating?	R/W	3~66°C, step: 1°C **5°C**		
A.8	[1-0C]	What is the desired delta T in heating for the additional zone?	R/W	3~10°C, step: 1°C **5°C**		
A.8	[1-0D]	What is the desired delta T in cooling for the main zone? (*)	R/W	3~10°C, step: 1°C **5°C**		
A.8	[1-0E]	What is the desired delta T in cooling for the additional zone? (*)	R/W	3~10°C, step: 1°C **5°C**		
A.8	[2-00]	When should the disinfection function be executed?	R/W	0: Each day 1: Monday 2: Tuesday 3: Wednesday 4: Thursday **5: Friday** 6: Saturday 7: Sunday		
A.8	[2-01]	Should the disinfection function be executed?	R/W	0: No **1: Yes**		
A.8	[2-02]	When should the disinfection function start?	R/W	0~23 hour, step: 1 hour **1**		
A.8	[2-03]	What is the disinfection target temperature?	R/W	**60°C**		
A.8	[2-04]	How long must the tank temperature be maintained?	R/W	40~60 min, step: 5 min **40 min**		
A.8	[2-05]	Room antifrost temperature	R/W	4~16°C, step: 1°C **12°C**		
A.8	[2-06]	Room frost protection	R/W	0: Disabled **1: Enabled**		
A.8	[2-09]	Adjust the offset on the measured room temperature	R/W	-5~5°C, step: 0,5°C **0°C**		
A.8	[2-0A]	Adjust the offset on the measured room temperature	R/W	-5~5°C, step: 0,5°C **0°C**		
A.8	[2-0B]	What is the required offset on the measured outdoor temp.?	R/W	-5~5°C, step: 0,5°C **0°C**		
A.8	[2-0C]	What emitter type is connected to the main LWT zone	R/W	**0: Underfloor heating** 1: Fancoil unit 2: Radiator		
A.8	[2-0D]	What emitter type is connected to the additional LWT zone?	R/W	**0: Underfloor heating** 1: Fancoil unit 2: Radiator		

(*) Setting is not applicable for this unit

Field settings table

Breadcrumb	Field code	Setting name		Range, step **Default value**	Installer setting at variance with default value Date	 Value
A.8	[3-00]	Is auto restart of the unit allowed?	R/W	0: No **1: Yes**		
A.8	[3-01]	--		**0**		
A.8	[3-02]	--		**1**		
A.8	[3-03]	--		**4**		
A.8	[3-04]	--		**2**		
A.8	[3-05]	--		**1**		
A.8	[3-06]	What is the maximum desired room temperature in heating?	R/W	18~30°C, step: 0,5°C **30°C**		
A.8	[3-07]	What is the mimimum desired room temperature in heating?	R/W	12~18°C, step: 0,5°C **12°C**		
A.8	[3-08]	What is the maximum desired room temperature in cooling? (*)	R/W	25~35°C, step: 0,5°C **35°C**		
A.8	[3-09]	What is the minimum desired room temperature in cooling? (*)	R/W	15~25°C, step: 0,5°C **15°C**		
A.8	[4-00]	What is the BUH operation mode?	R/W	0: Disabled **1: Enabled** 2: Only DHW		
A.8	[4-01]	Which electric heater has priority?	R/W	**0: None** 1: - 2: BUH		
A.8	[4-02]	Below which outdoor temperature is heating allowed?	R/W	14~35°C, step: 1°C **22°C**		
A.8	[4-03]	--		**3**		
A.8	[4-04]	Is the pump allowed during pipe freeze prevention?	R/O	**0: intermittent pump operation** 1: Continuous pump operation 2: OFF		
A.8	[4-05]	--		**0**		
A.8	[4-06]	Emergency	R/W	**0: Manual** 1: Automatic		
A.8	[4-08]	Which power limitation mode is required on the system?	R/W	**0: No limitation** 1: Continuous 2: Digital inputs		
A.8	[4-09]	Which power limitation type is required?	R/W	0: Current **1: Power**		
A.8	[4-0A]	--		**0**		
A.8	[4-0B]	Automatic cooling/heating changeover hysteresis. (*)	R/W	1~10°C, step: 0,5°C **1°C**		
A.8	[4-0D]	Automatic cooling/heating changeover offset. (*)	R/W	1~10°C, step: 0,5°C **3°C**		
A.8	[5-00]	Is backup heater operation allowed above equilibrium temperature during space heating operation?	R/W	0: Allowed **1: Not allowed**		
A.8	[5-01]	What is the equilibrium temperature for the building?	R/W	-15~35°C, step: 1°C **0°C**		
A.8	[5-02]	Space heating priority.	R/W	**0: Disabled** 1: Enabled		
A.8	[5-03]	Space heating priority temperature.	R/W	-15~35°C, step: 1°C **0°C**		
A.8	[5-04]	Set point correction for domestic hot water temperature.	R/W	0~20°C, step: 1°C **10°C**		
A.8	[5-05]	What is the requested limit for DI1?	R/W	0~50 A, step: 1 A **50 A**		
A.8	[5-06]	What is the requested limit for DI2?	R/W	0~50 A, step: 1 A **50 A**		
A.8	[5-07]	What is the requested limit for DI3?	R/W	0~50 A, step: 1 A **50 A**		
A.8	[5-08]	What is the requested limit for DI4?	R/W	0~50 A, step: 1 A **50 A**		
A.8	[5-09]	What is the requested limit for DI1?	R/W	0~20 kW, step: 0,5 kW **20 kW**		
A.8	[5-0A]	What is the requested limit for DI2?	R/W	0~20 kW, step: 0,5 kW **20 kW**		
A.8	[5-0B]	What is the requested limit for DI3?	R/W	0~20 kW, step: 0,5 kW **20 kW**		
A.8	[5-0C]	What is the requested limit for DI4?	R/W	0~20 kW, step: 0,5 kW **20 kW**		
A.8	[5-0D]	--		**0**		
A.8	[5-0E]	--		**1**		
A.8	[6-00]	The temperature difference determining the heat pump ON temperature.	R/W	2~40°C, step: 1°C **25°C**		
A.8	[6-01]	The temperature difference determining the heat pump OFF temperature.	R/W	0~10°C, step: 1°C **2°C**		
A.8	[6-02]	--		**0**		
A.8	[6-03]	--		**0**		
A.8	[6-04]	--		**0**		
A.8	[6-05]	--		**0**		
A.8	[6-06]	--		**0**		
A.8	[6-07]	--		**0**		
A.8	[6-08]	What is the hysteresis to be used in reheat mode?	R/W	**2~20°C, step: 1°C** **10°C**		
A.8	[6-09]	--		**0**		
A.8	[6-0A]	What is the desired comfort storage temperature?	R/W	30~[6-0E]°C, step: 1°C		
A.8	[6-0B]	What is the desired eco storage temperature?	R/W	30~min(50, [6-0E])°C, step: 1°C **50°C**		
A.8	[6-0C]	What is the desired reheat temperature?	R/W	30~min(50, [6-0E])°C, step: 1°C **45°C**		
A.8	[6-0D]	What is the desired DHW production type?	R/W	0: Reheat only **1: Reheat + sched.** 2: Scheduled only		
A.8	[6-0E]	What is the maximum temperature setpoint?	R/W	40~60°C, step: 1°C **60°C**		
A.8	[7-00]	--		**0**		
A.8	[7-01]	--		**2**		
A.8	[7-02]	How many leaving water temperature zones are there?	R/W	0: 1 LWT zone **1: 2 LWT zones**		
A.8	[7-03]	--		**2.5**		
A.8	[7-04]	--		**0**		
A.8	[7-05]	Boiler efficiency	R/W	**0: Very high** 1: High 2: Medium 3: Low 4: Very low		
A.8	[8-00]	Minimum running time for domestic hot water operation.	R/W	0~20 min, step 1 min **1 min**		
A.8	[8-01]	Maximum running time for domestic hot water operation.	R/W	5~95 min, step: 5 min **30 min**		

(*) Setting is not applicable for this unit

Field settings table

Breadcrumb	Field code	Setting name		Range, step **Default value**	Installer setting at variance with default value Date	 Value
A.8	[8-02]	Anti-recycling time.	R/W	0~10 hour, step: 0,5 hour **0,5 hour**		
A.8	[8-03]	--		**50**		
A.8	[8-04]	--		**95**		
A.8	[8-05]	Allow modulation of the LWT to control the room temp?	R/W	**0: No** 1: Yes		
A.8	[8-06]	Leaving water temperature maximum modulation.	R/W	0~10°C, step: 1°C **5°C**		
A.8	[8-07]	What is the desired comfort main LWT in cooling? (*)	R/W	[9-03]~[9-02], step: 1°C **18°C**		
A.8	[8-08]	What is the desired eco main LWT in cooling? (*)	R/W	[9-03]~[9-02], step: 1°C **20°C**		
A.8	[8-09]	What is the desired comfort main LWT in heating?	R/W	[9-01]~[9-00]°C, step: 1°C **35°C**		
A.8	[8-0A]	What is the desired eco main LWT in heating?	R/W	[9-01]~[9-00]°C, step: 1°C **33°C**		
A.8	[8-0B]	--		**13**		
A.8	[8-0C]	--		**10**		
A.8	[8-0D]	--		**16**		
A.8	[8-0E]	What is the ambient temp for BUH only operation?	R/W	-15~25°C, step: 1°C **-7°C**		
A.8	[9-00]	What is the maximum desired LWT for main zone in heating?	R/W	37~60°C, step: 1°C **55°C**		
A.8	[9-01]	What is the mimimum desired LWT for main zone in heating?	R/W	15~37°C, step: 1°C **25°C**		
A.8	[9-02]	What is the maximum desired LWT for main zone in cooling? (*)	R/W	18~22°C, step: 1°C **22°C**		
A.8	[9-03]	What is the mimimum desired LWT for main zone in cooling? (*)	R/W	5~18°C, step: 1°C **5°C**		
A.8	[9-04]	Leaving water temperature overshoot temperature.	R/W	1~4°C, step: 1°C **1°C**		
A.8	[9-05]	What is the mimimum desired LWT for add. zone in heating?	R/W	15~37°C, step: 1°C **25°C**		
A.8	[9-06]	What is the maximum desired LWT for add. zone in heating?	R/W	37~55, step: 1°C **55°C**		
A.8	[9-07]	What is the mimimum desired LWT for add. zone in cooling? (*)	R/W	5~18°C, step: 1°C **5°C**		
A.8	[9-08]	What is the maximum desired LWT for add. zone in cooling? (*)	R/W	18~22°C, step: 1°C **22°C**		
A.8	[9-0C]	Room temperature hysteresis.	R/W	1~6°C, step: 0,5°C **1 °C**		
A.8	[9-0D]	Pump speed limitation	R/W	0~8, step:1 0 : No limitation 1~4 : 50~80% 5~8 : 50~80% during sampling **6**		
A.8	[9-0E]	Pump speed limitation additional Zone	R/W	0~8, step:1 0 : No limitation 1~4 : 50~80% 5~8 : 50~80% during sampling **6**		
A.8	[C-00]	--		**0**		
A.8	[C-01]	--		**0**		
A.8	[C-02]	Is an external backup heat source connected?	R/W	**0: No** 1: Bivalent		
A.8	[C-03]	Bivalent activation temperature.	R/W	-25~25°C, step: 1°C **0°C**		
A.8	[C-04]	Bivalent hysteresis temperature.	R/W	2~10°C, step 1°C **3°C**		
A.8	[C-05]	What is the thermo request contact type for the main zone?	R/W	0: - 1: 1 contact **2: 2 contacts**		
A.8	[C-06]	What is the thermo request contact type for the add. zone?	R/W	0: - 1: 1 contact **2: 2 contacts**		
A.8	[C-07]	What is the unit control method in space operation?	R/W	**0: LWT control** 1: Ext RT control 2: RT control		
A.8	[C-08]	Which type of external sensor is installed?	R/W	**0: No** 1: Outdoor sensor 2: Room sensor		
A.8	[C-09]	What is the required alarm output contact type?	R/W	**0: Normally open** 1: Normally closed		
A.8	[C-0A]	--		**0**		
A.8	[C-0C]	--		**0**		
A.8	[C-0D]	--		**0**		
A.8	[C-0E]	--		**0**		
A.8	[D-00]	Which heaters are permitted if prefer. kWh rate PS is cut?	R/W	**0: None** 1: - 2: BUH only 3: -		
A.8	[D-01]	Contact type of preferential kWh rate PS installation?	R/W	**0: No** 1: Active open 2: Active closed 3: Safety thermostat		
A.8	[D-02]	Which type of DHW pump is installed?	R/W	**0: No** 1: Secondary rtrn 2: Disinf. Shunt		
A.8	[D-03]	Leaving water temperature compensation around 0°C.	R/W	0: No **1: increase 2°C, span 4°C** 2: increase 4°C, span 4°C 3: increase 2°C, span 8°C 4: increase 4°C, span 8°C		
A.8	[D-04]	Is a demand PCB connected?	R/W	**0: No** 1: Pwr consmp ctrl		
A.8	[D-05]	Is the pump allowed to run if prefer. kWh rate PS is cut?	R/W	0: Forced off **1: As normal**		
A.8	[D-07]	Is a solar kit connected?	R/W	**0: No** 1: Yes		
A.8	[D-08]	Is an external kWh meter used for power measurement?	R/W	**0: No** 1: 0,1 pulse/kWh 2: 1 pulse/kWh 3: 10 pulse/kWh 4: 100 pulse/kWh 5: 1000 pulse/kWh		

(*) Setting is not applicable for this unit

Field settings table

Breadcrumb	Field code	Setting name		Range, step **Default value**	Installer setting at variance with default value Date	Value
A.8	[D-09]	Is an external kWh meter used for power measurement?	R/W	**0: No** 1: 0,1 pulse/kWh 2: 1 pulse/kWh 3: 10 pulse/kWh 4: 100 pulse/kWh 5: 1000 pulse/kWh		
A.8	[D-0A]	--		**0**		
A.8	[D-0B]	--		**2**		
A.8	[D-0C]	--		**0**		
A.8	[D-0D]	--		**0**		
A.8	[D-0E]	--		**0**		
A.8	[E-00]	Which type of unit is installed?	R/O	0~5 **0: LT split**		
A.8	[E-01]	Which type of compressor is installed?	R/O	**0**		
A.8	[E-02]	What is the indoor unit software type?	R/O	**1**		
A.8	[E-03]	--	R/O	**2**		
A.8	[E-04]	Is the power saving function available on the outdoor unit?	R/O	0: No **1: Yes**		
A.8	[E-05]	Can the system prepare domestic hot water?	R/O	0~1 **1: Yes**		
A.8	[E-06]	Is a DHW tank installed in the system?	R/O	0~1 **1: Yes**		
A.8	[E-07]	What kind of DHW tank is installed?	R/O	0~6 **1: Integrated**		
A.8	[E-08]	Power saving function for outdoor unit.	R/O	0~1 **1: Enabled**		
A.8	[E-09]	--		**1**		
A.8	[E-0A]	--		**0**		
A.8	[E-0B]	--		**1**		
A.8	[E-0C]	--		**0**		
A.8	[E-0D]	Is the system filled with glycol?	R/W	**0: No** 1: Yes		
A.8	[E-0E]	--		**0**		
A.8	[F-00]	Pump operation allowed outside range.	R/W	**0: Disabled**		
A.8	[F-01]	Above which outdoor temperature is cooling allowed? (*)	R/W	10~35°C, step: 1°C **20°C**		
A.8	[F-02]	--		**3**		
A.8	[F-03]	--		**5**		
A.8	[F-04]	--		**0**		
A.8	[F-05]	--		**0**		
A.8	[F-09]	Pump operation during flow abnormality.	R/W	**0: Disabled** 1: Enabled		
A.8	[F-0A]	--		**0**		
A.8	[F-0B]	Close shut-off valve during thermo OFF?	R/W	**0: No** 1: Yes		
A.8	F-0C	Close shut-off valve during cooling? (*)	R/W	0: No **1: Yes**		
A.8	[F-0D]	What is the pump operation mode?	R/W	0: Continuous **1: Sample** 2: Request		

(*) Setting is not applicable for this unit

Copyright 2019 Daikin

DAIKIN EUROPE N.V.

Zandvoordestraat 300, B-8400 Oostende, Belgium

4P596821-1 2019.10